ONDLE

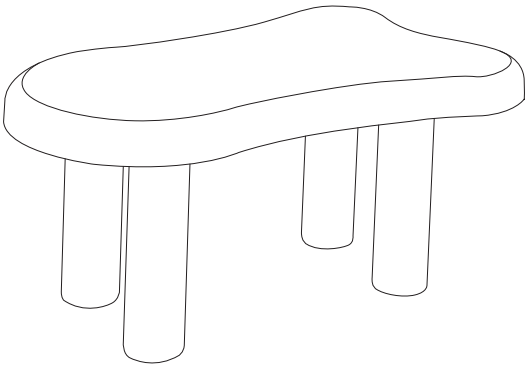

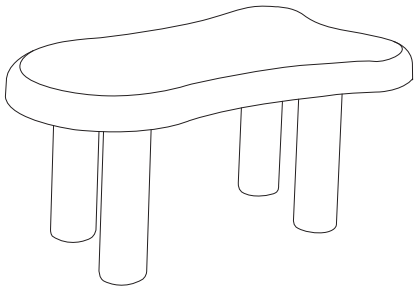

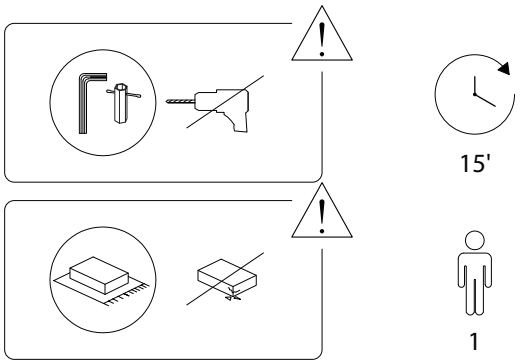

1/4

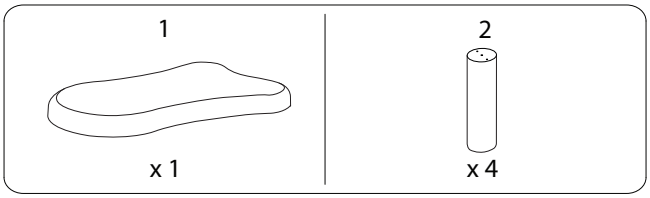

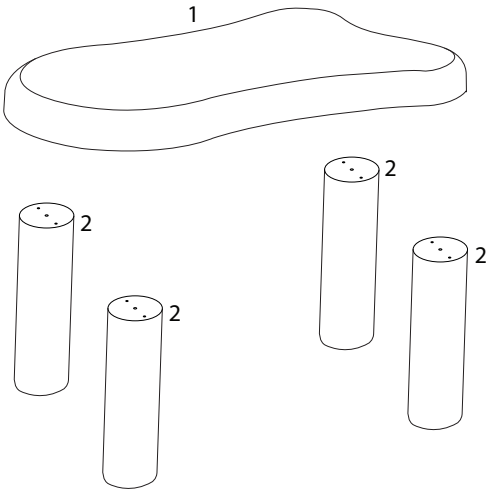

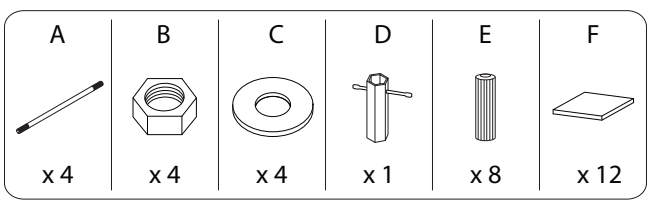

2/4

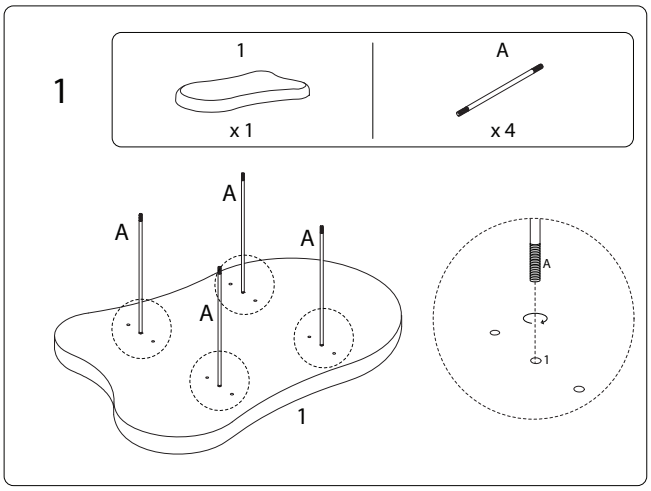

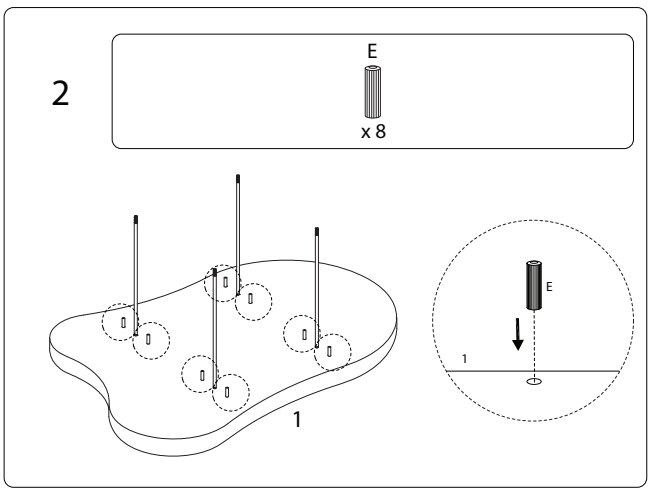

3/4

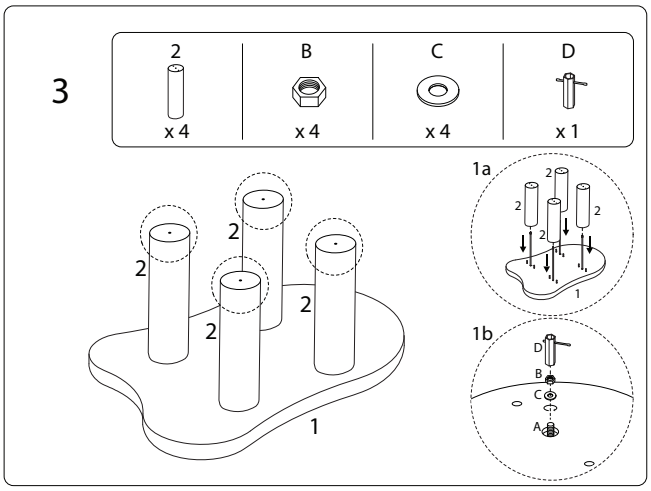

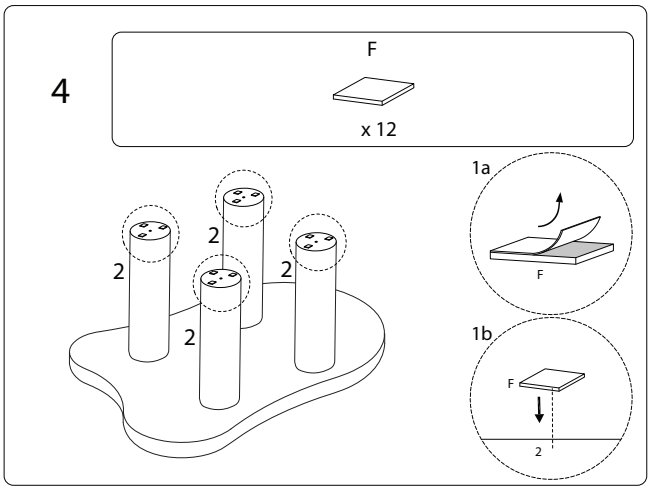

2321/ONDLE/191125/