SOHO

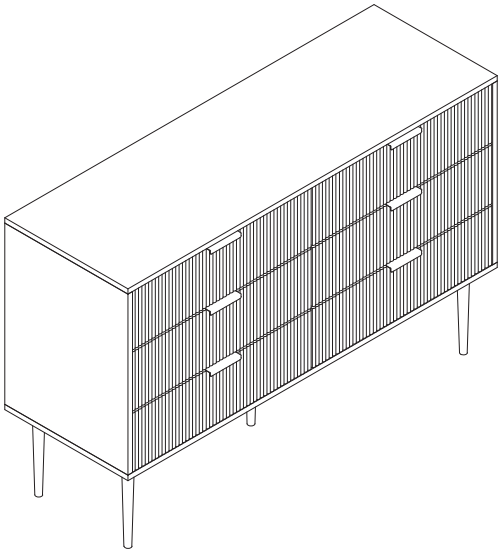

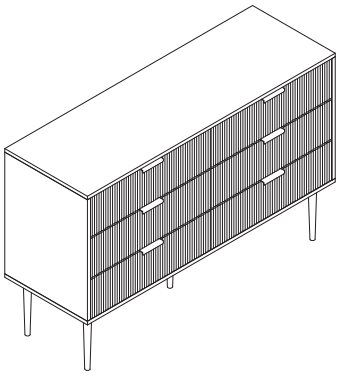

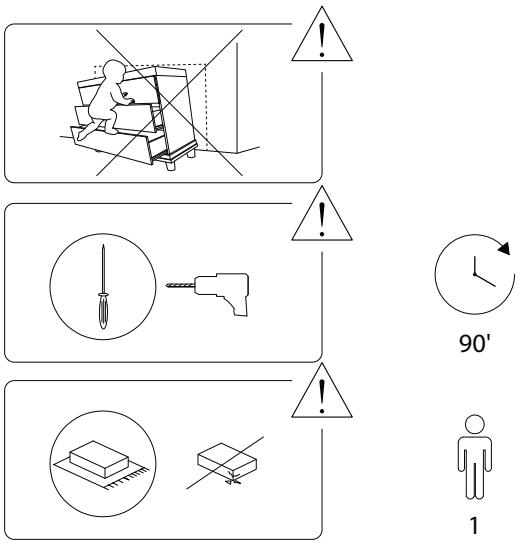
90'
1

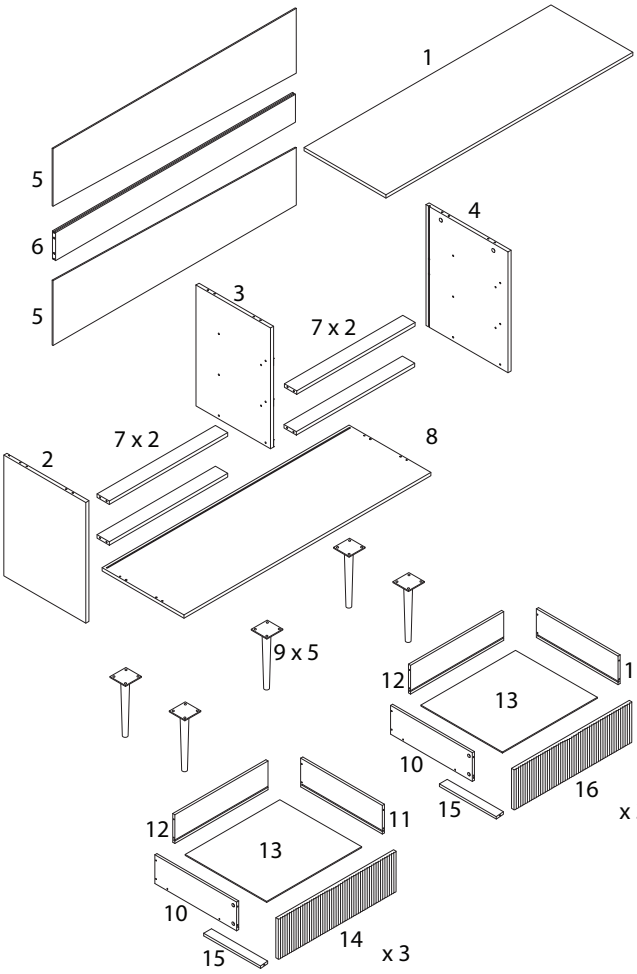
1
5
6
5
4
3
7 x 2
7 x 2
8
2
9 x 5
12
11
13
10
16
15
x 3
12
11
13
10
14
15
x 3

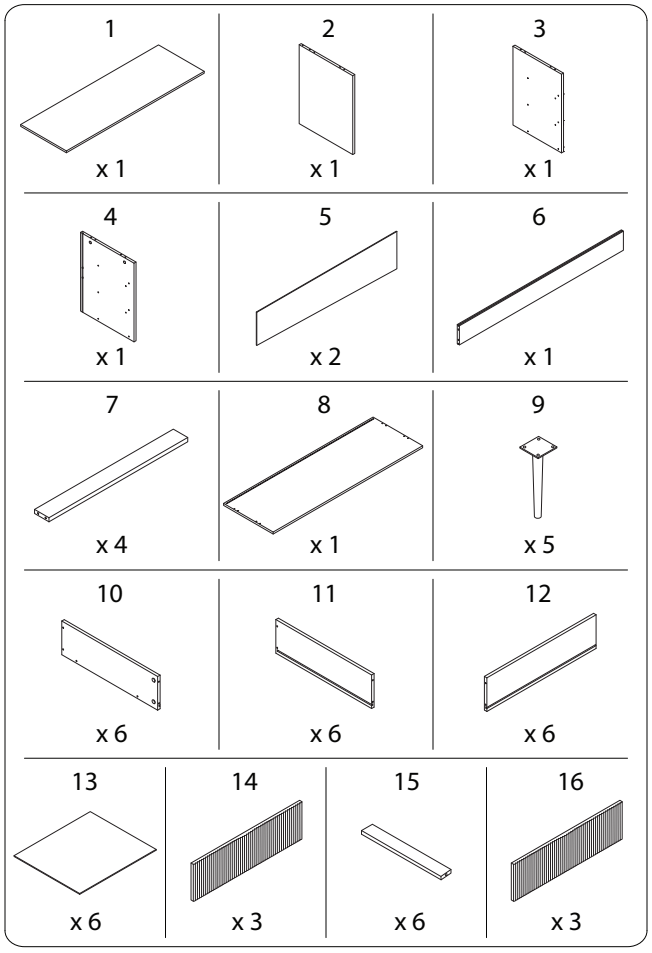
1
x 1
2
x 1
3
x 1
4
x 1
5
x 2
6
x 1
7
x 4
8
x 1
9
x 5
10
x 6
11
x 6
12
x 6
13
x 6
14
x 3
15
x 6
16
x 3

A	B	C
x 48	x 48	x 20
D M4 x 30 x 38	E_{CL} x 6	E_{CR} x 6
E_{DL} x 6	E_{DR} x 6	F M3 x 12 x 60
G M4 x 14 x 22	H x 6	I x 8
J M3 x 16 x 8	K x 2	L x 2

1

2	E_{CL}	F
x 1	x 3	M3 x 12 x 6

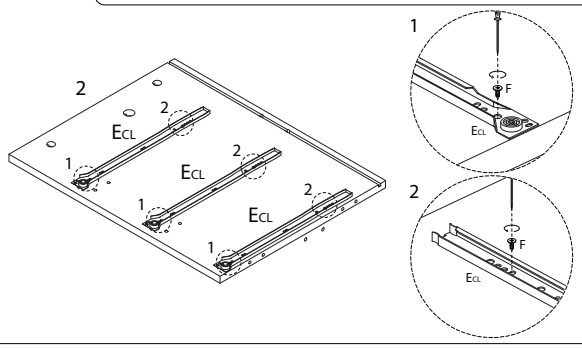

2

4	E_{CR}	F
x 1	x 3	M3 x 12 x 6

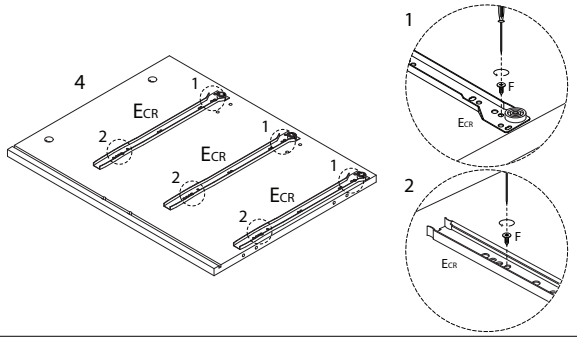

3

3	E_{CL}	F
x 1	x 3	M3 x 12 x 6

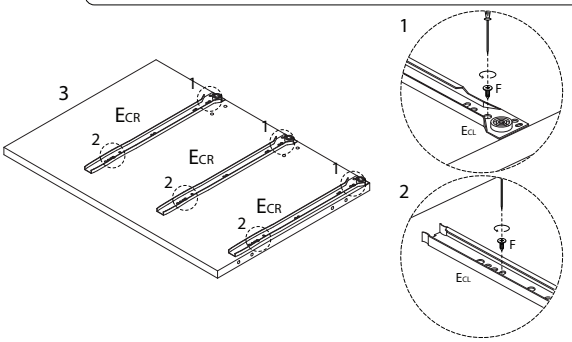

5

A
x 4

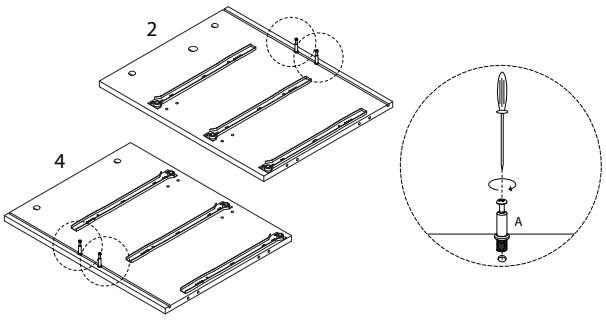

4

E_{CR}	F
x 3	M3 x 12 x 6

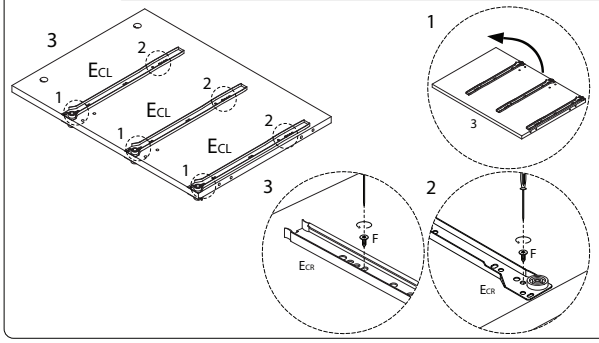

6

A	C
x 6	x 6

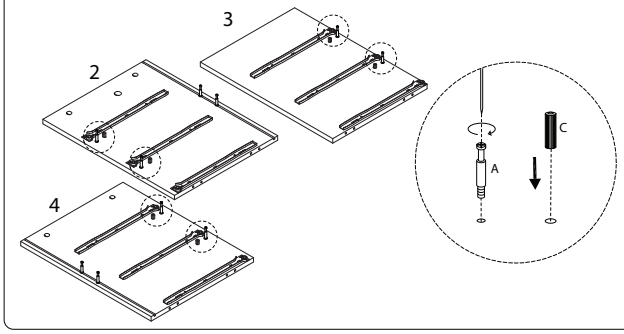

7

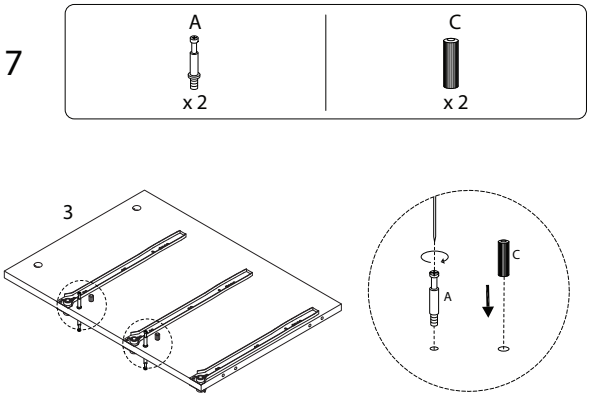

8

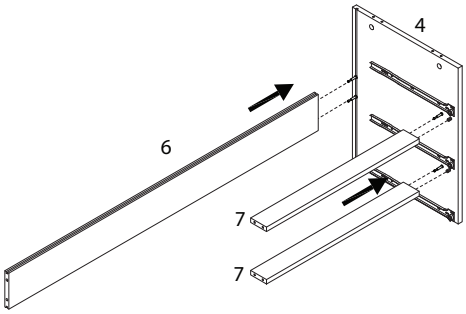

9

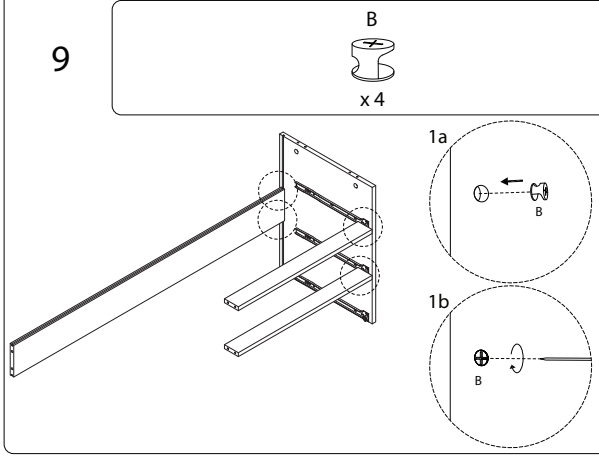

10

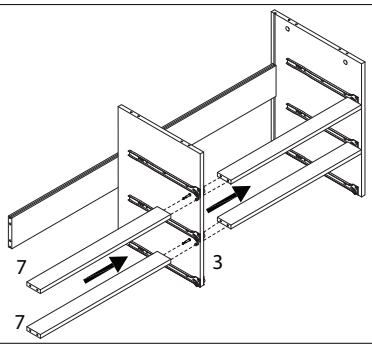

11

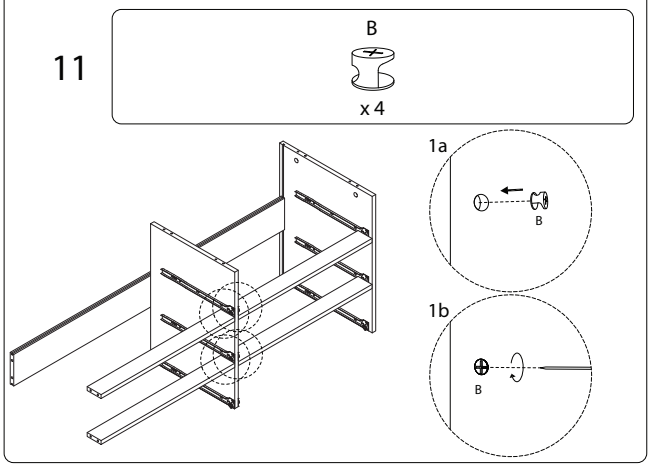

12

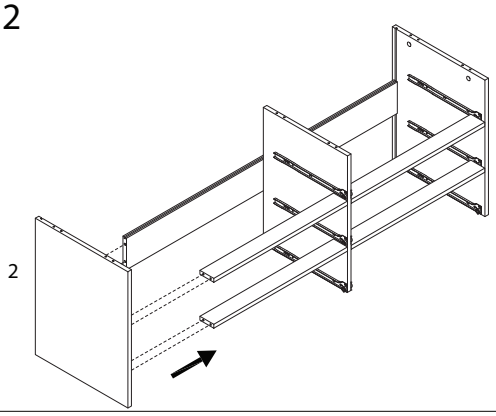

13

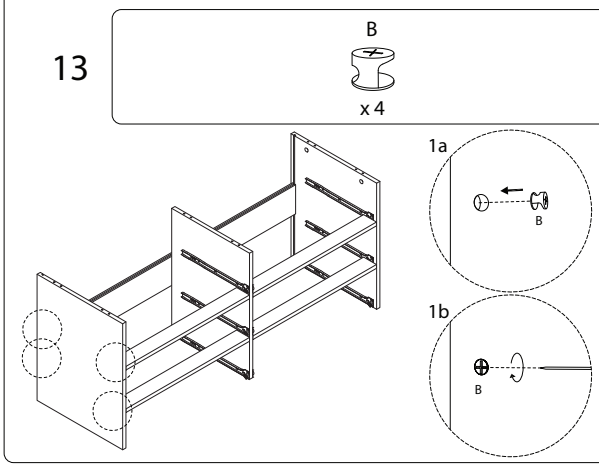

14

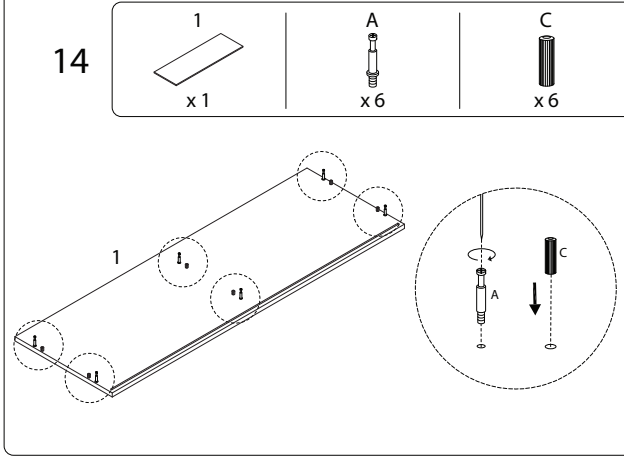

15

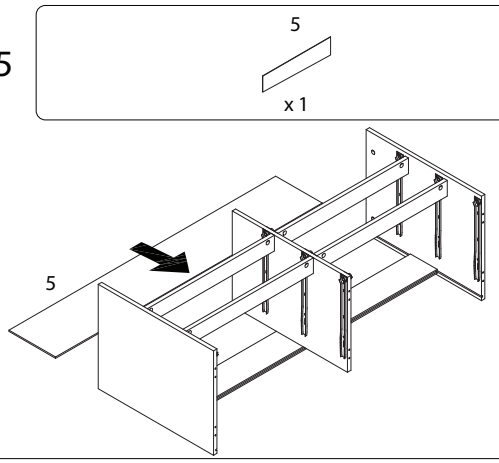

16

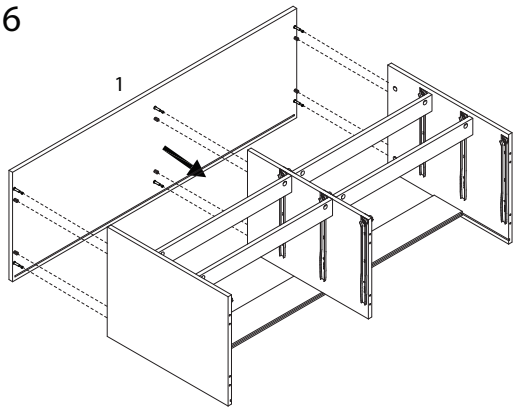

17

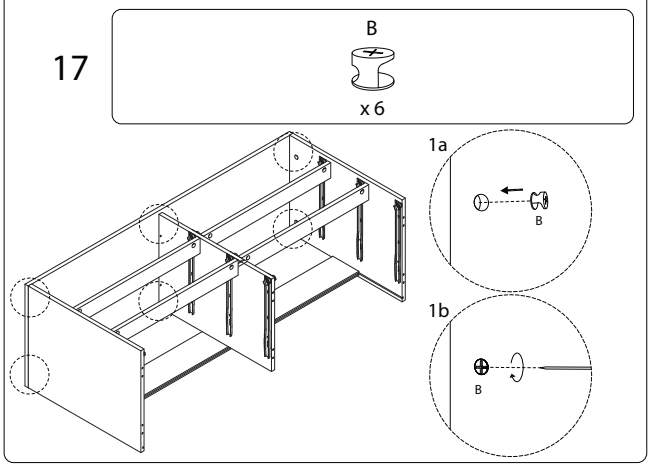

18

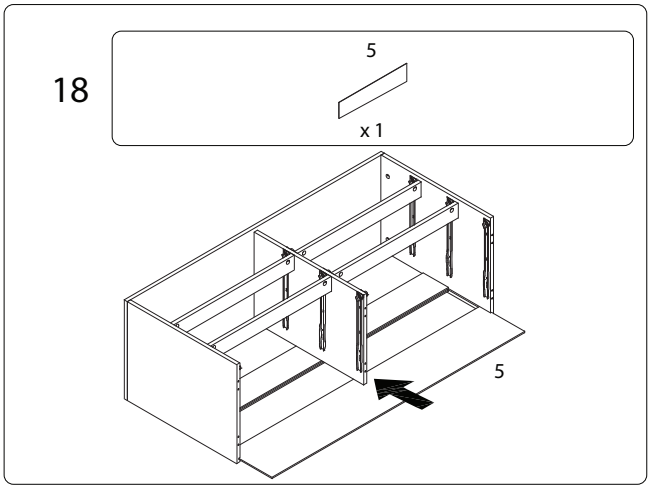

19

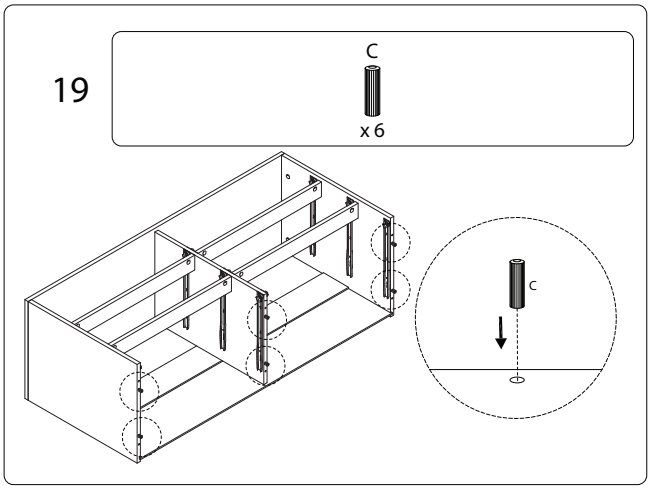

20

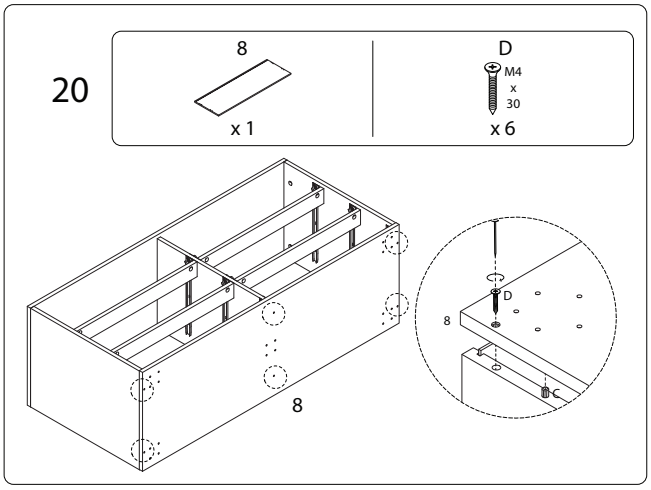

21

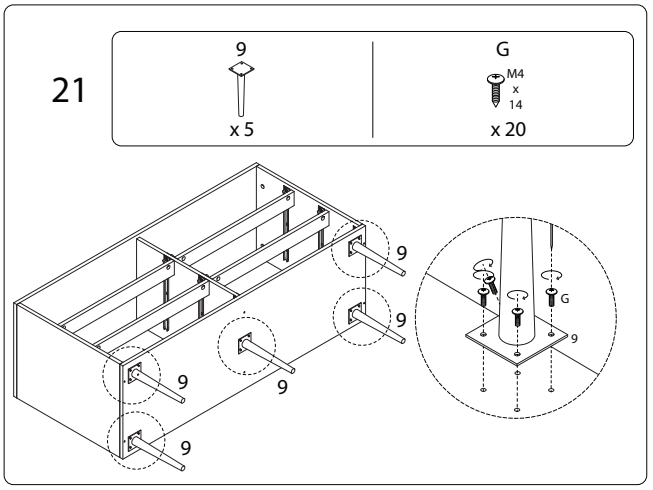

22 x 6

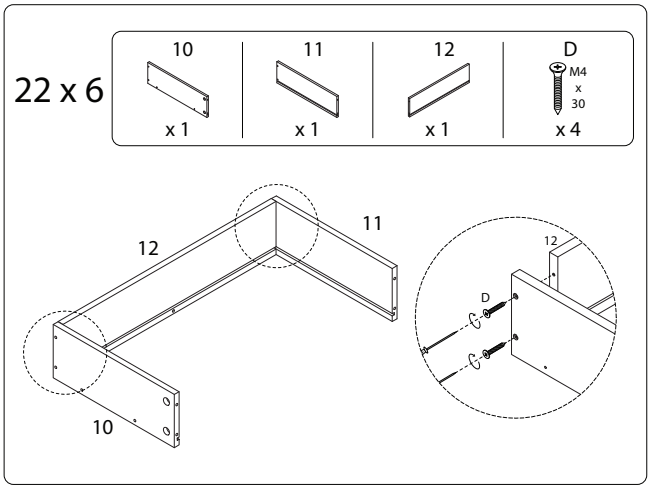

23 x 6

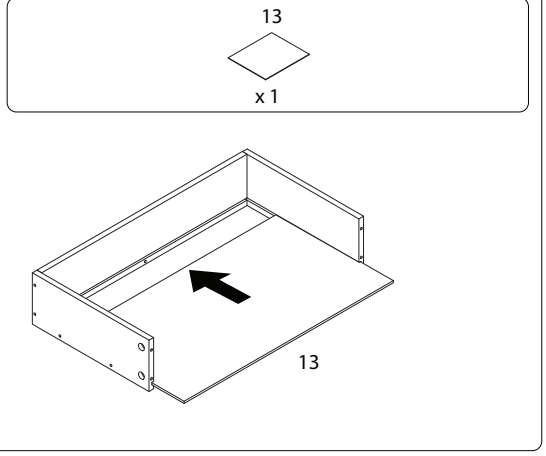

24 x 3

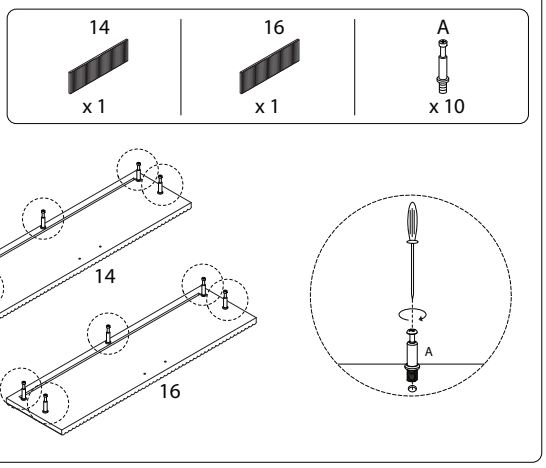

25 x 3

26 x 3

27 x 3

28 x 3

29 x 3

30 x 3

31

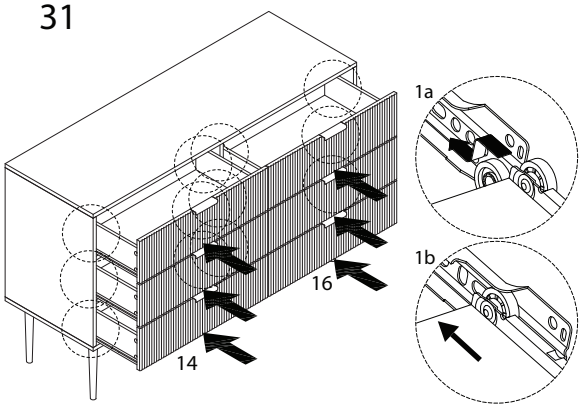

32

I	J
x 8	M3 x 16 x 8

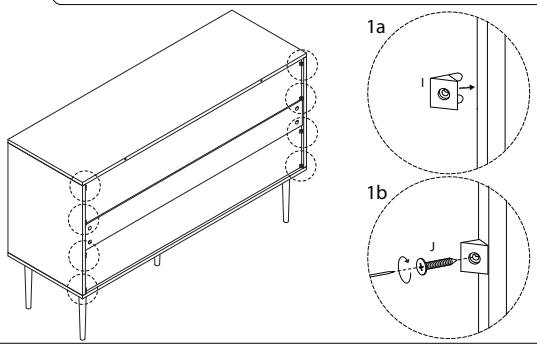

33

G	K
M4 x 14 x 2	x 2

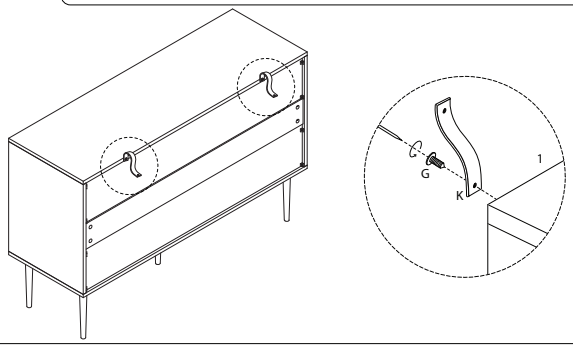

34
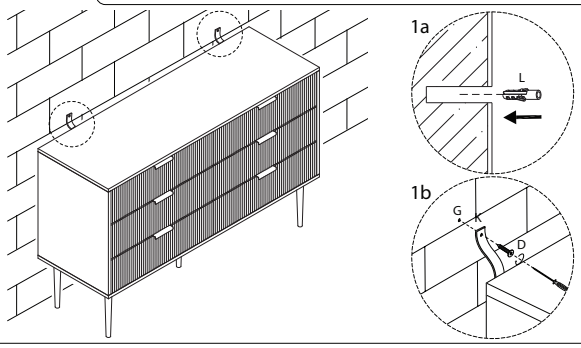
D	L
M4 x 30 x 2	x 2