BUBBLY

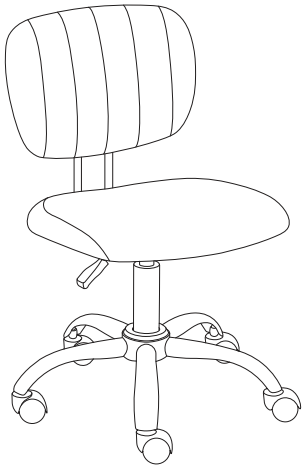

1/7

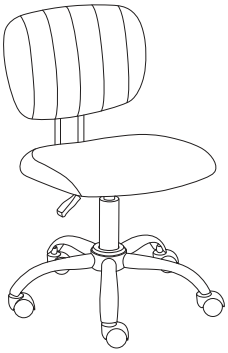

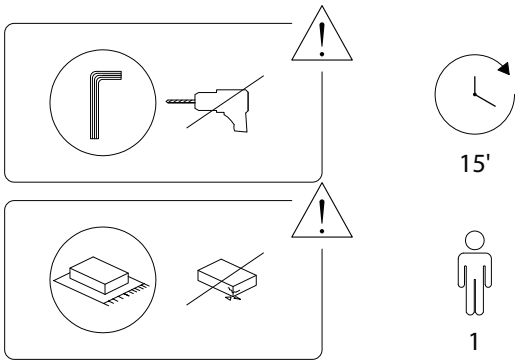

2/7

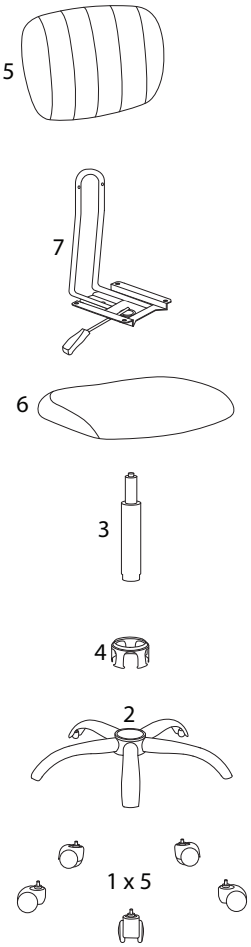

3/7

1 x 5	2 x 1	3 x 1
4 x 1	5 x 1	
6 x 1	7 x 1	
A M6 x 30 x 2	B M6 x 16 x 4	
C x 4	D x 1	

4/7

2129/BUBBLY/030426

1

1	2
x 5	x 1

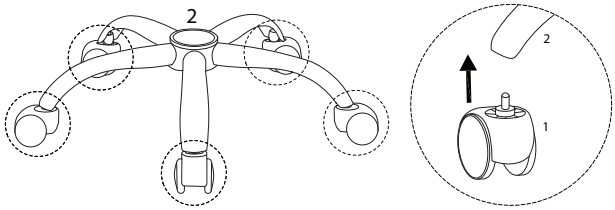

2

3	4
x 1	x 1

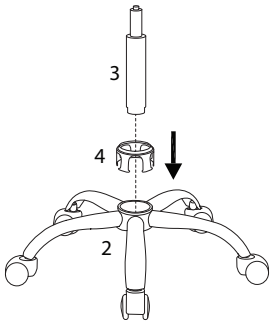

3

6	7	B	C	D
x 1	x 1	M6 x 16 x 4	x 4	x 1

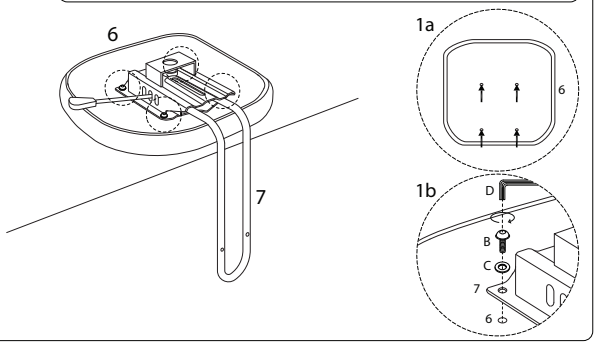

4

5	A	D
x 1	M6 x 30 x 2	x 1

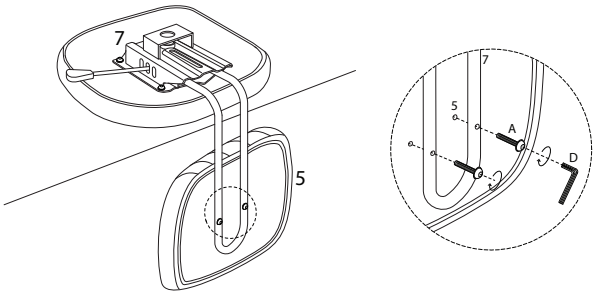

5

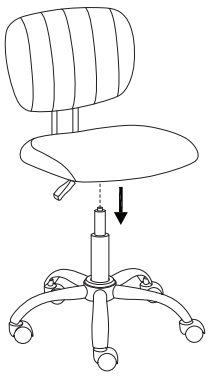

!

