OLATHE

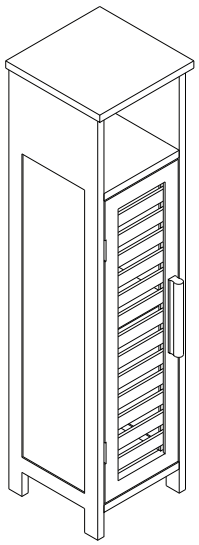

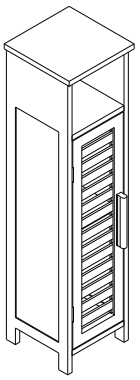

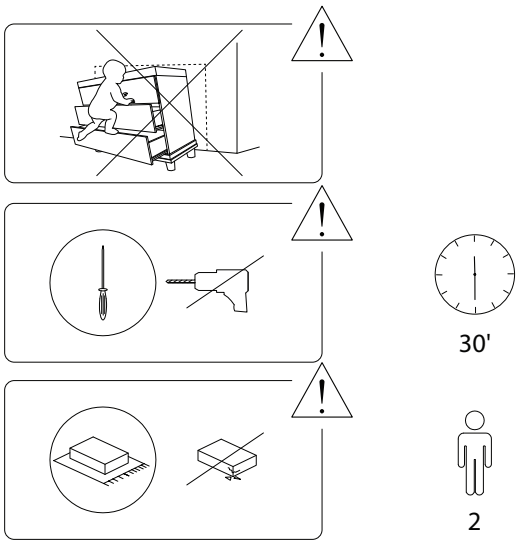

1	2	3	4
		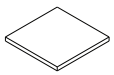	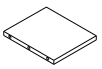
x 1	x 1	x 1	x 1

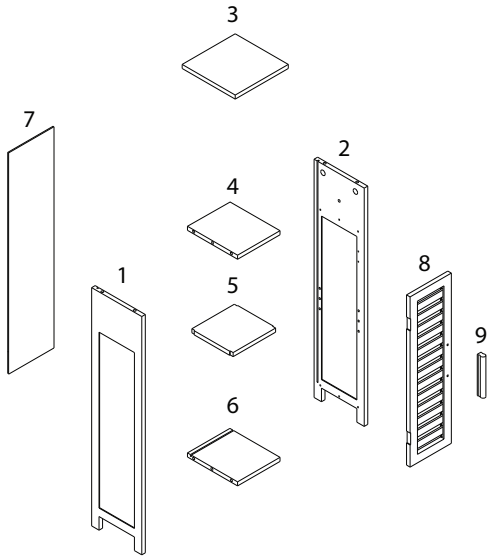

5	6	7	8	9
	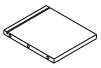		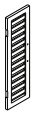	
x 1	x 1	x 1	x 1	x 1

A	B	C
		 M3 x 12
x 12	x 12	x 12
D	**E**	**F**
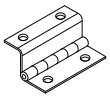	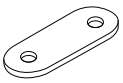	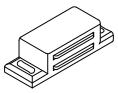
x 2	x 1	x 1
G	**H**	**I**
 M4 x 20		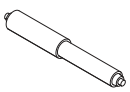
x 2	x 4	x 1
J		
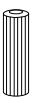		
x 4		

1

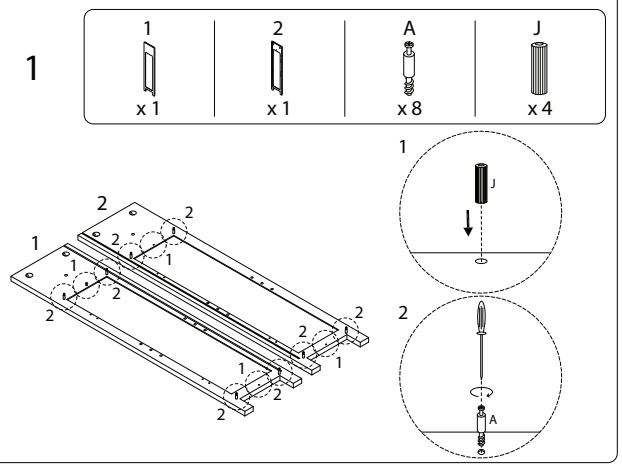
1
x 1
2
x 1
A
x 8
J
x 4

1
2
2
1
2
1
2
2
2
1
2
2
1
2
2
1
J
2
A

2

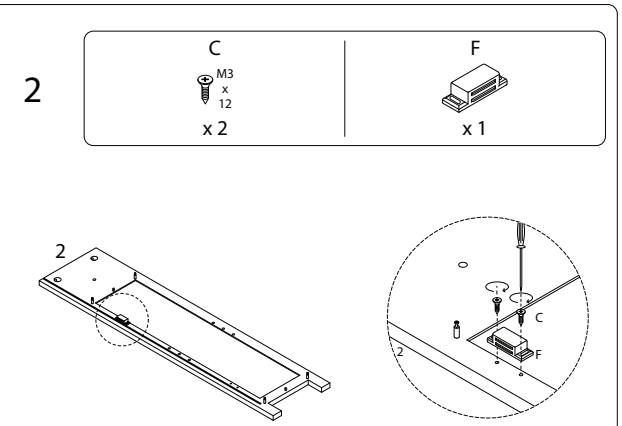
C
M3
x
12
x 2
F
x 1
2
2
C
F

3

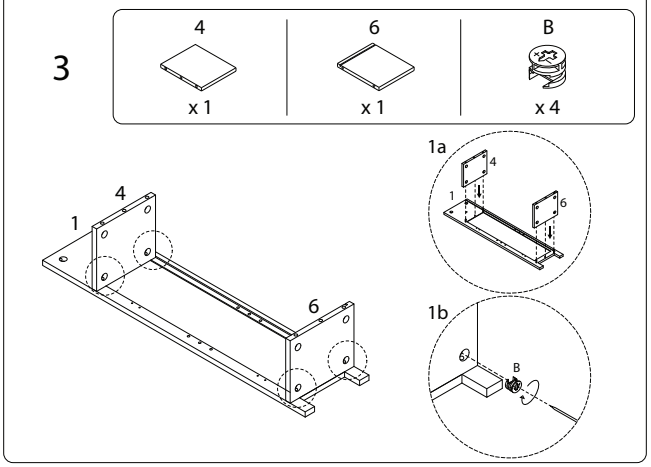
4
x 1
6
x 1
B
x 4
1
4
6
1a
4
1
6
1b
B

4

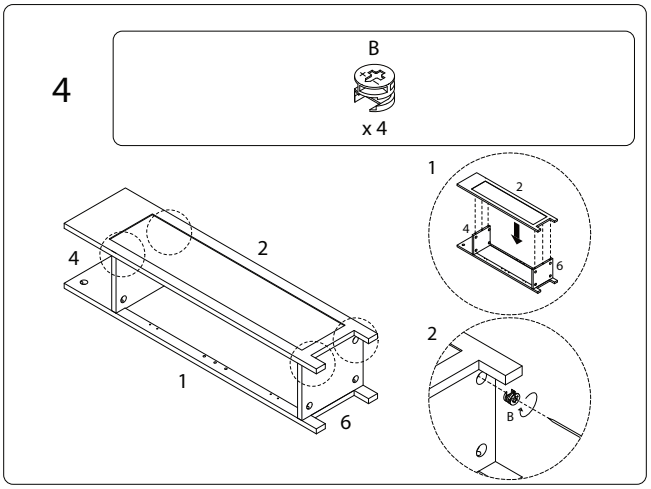
B
x 4
4
2
1
6
1
2
4
6
2
B

5

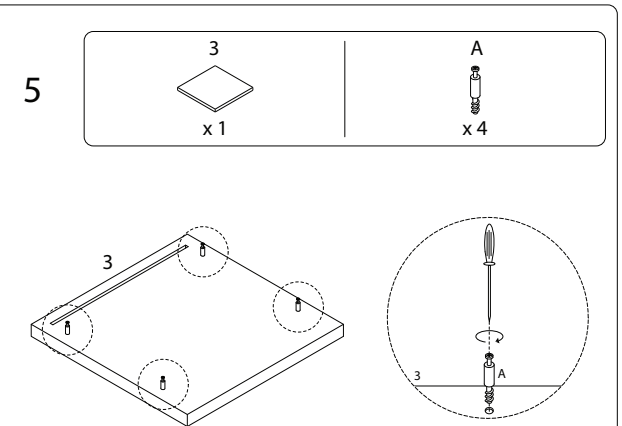
3
x 1
A
x 4
3
3
A

6

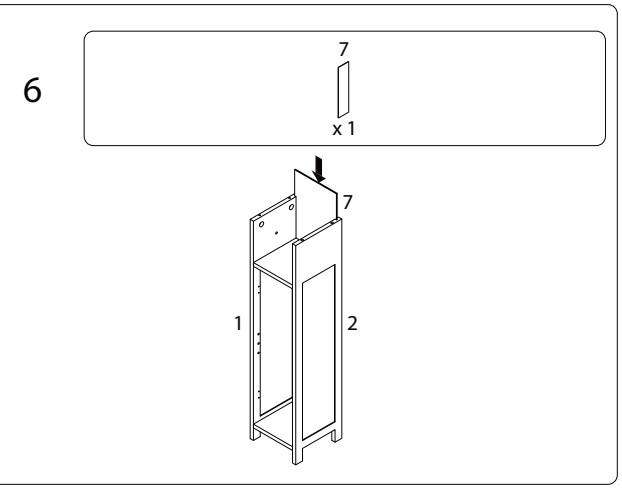
7
x 1
7
1
2

7

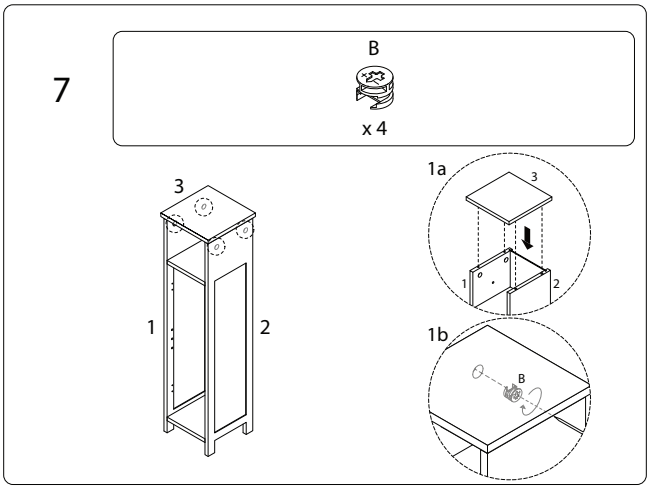
B
x 4
3
1
2
1a
3
1
2
1b
B

8

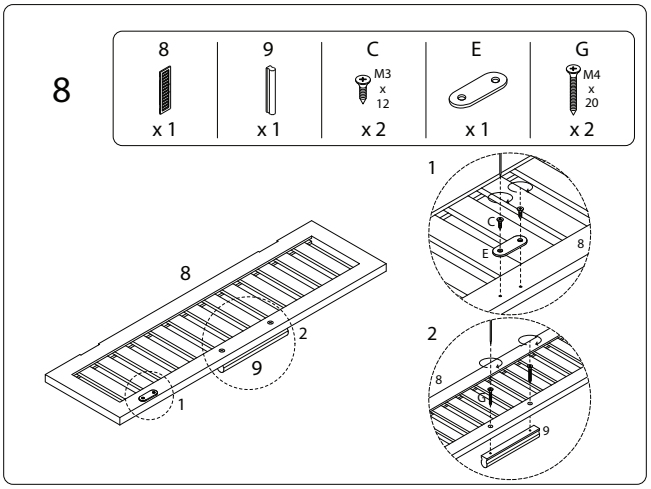
8
x 1
9
x 1
C
M3
x
12
x 2
E
x 1
G
M4
x
20
x 2
1
C
E
8
8
2
9
1
2
8
G
9

9

D
x 2

C
M3 x 12
x 8

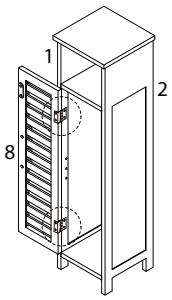

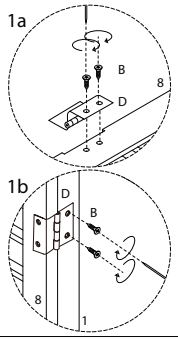

10

H
x 4

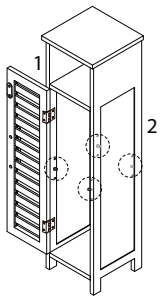

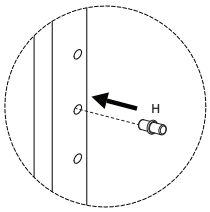

2213/OLATHE/270326/

11

5
x 1

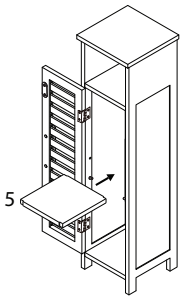

12

I
x 1

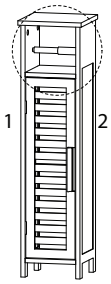

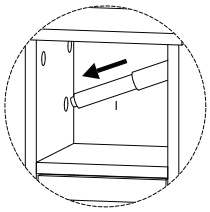

2213/OLATHE/270326/