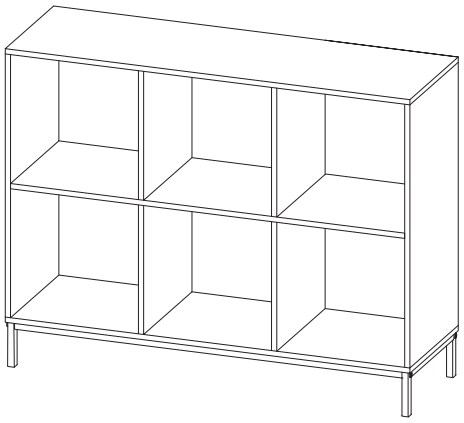
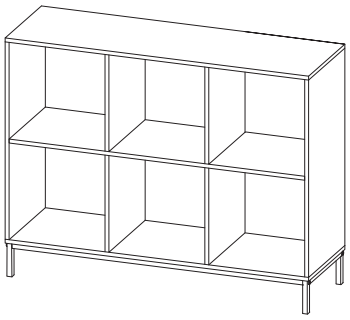
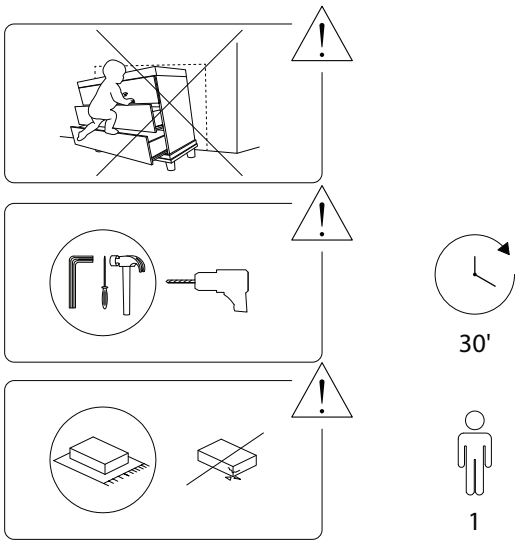
PEMBERTON



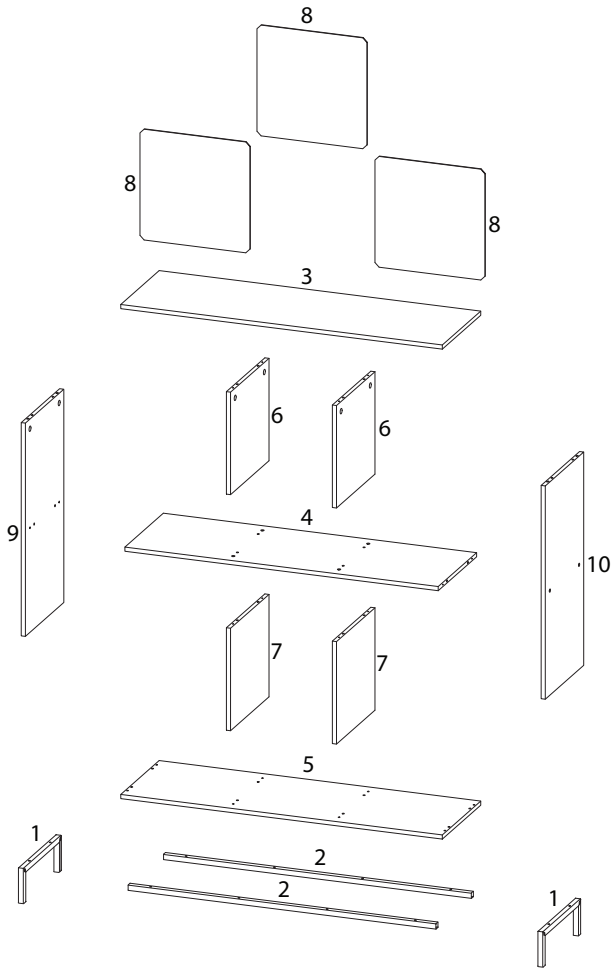
1/12





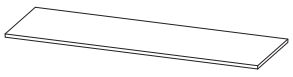
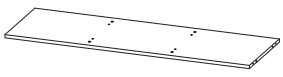
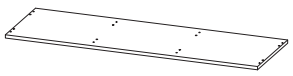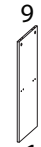
2/12

1363/PEMBERTON/070526



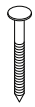
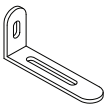
3/12

1363/PEMBERTON/070526

1  x 2	2  x 2
3  x 1	4  x 1
5  x 1	6  x 2
7  x 2	8  x 3
9  x 1	10  x 1

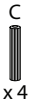
4/12

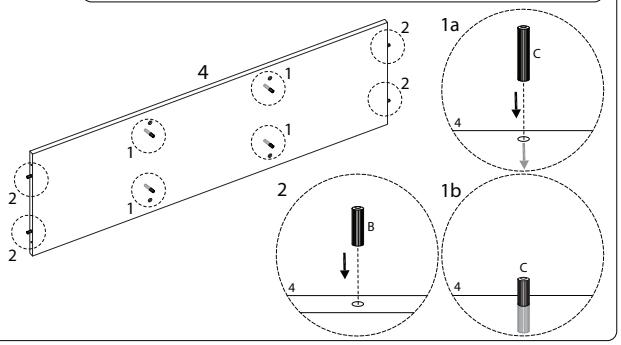
1363/PEMBERTON/070526

A	B	C
 M4 x 35		
x 18	x 20	x 4
D	**E**	**F**
		
x 8	x 8	x 24
G	**H**	**I**
 M6 x 30	 M4 x 12	
x 4	x 2	x 2
J	**K**	**L**
	 M4 x 25	
x 2	x 12	x 8
M		
		
x 1		

1363/PEMBERTON/070526

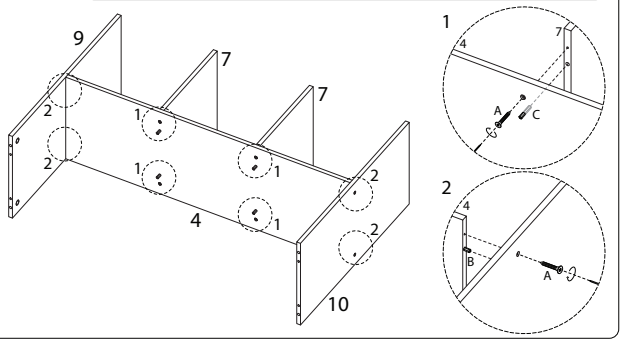
1

4	B	C
		
x 1	x 4	x 4



2

7	9	10	A
			 M4 x 35
x 2	x 1	x 1	x 8

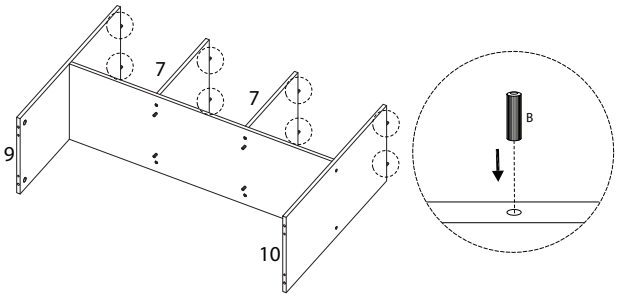


1363/PEMBERTON/070526

3

B

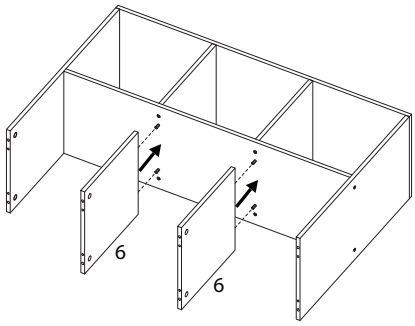
x 8



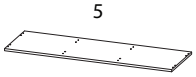
5

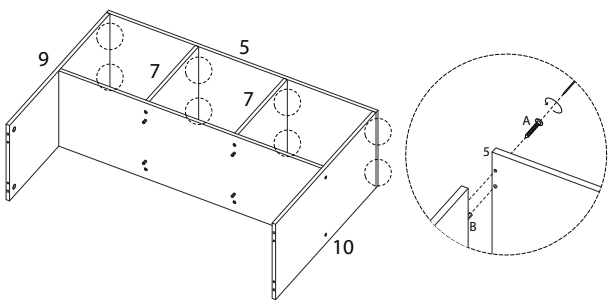
6

x 2



4

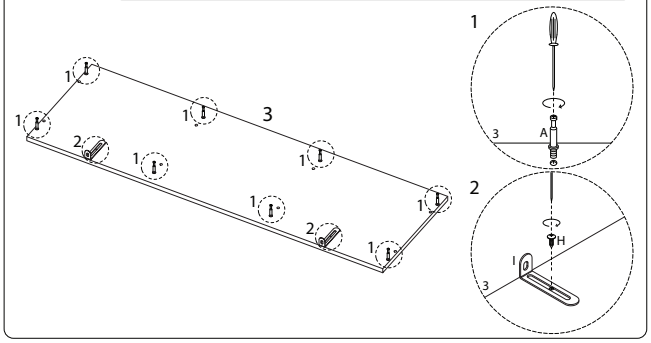
5	A
	 M4 x 35
x 1	x 8



1363/PEMBERTON/070526

6

3	D	H	I
		 M4 x 12	
x 1	x 8	x 2	x 2

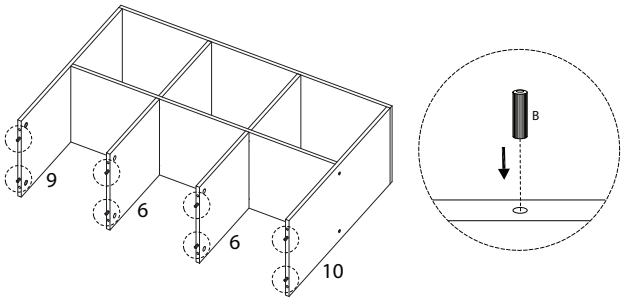


1363/PEMBERTON/070526

7

B

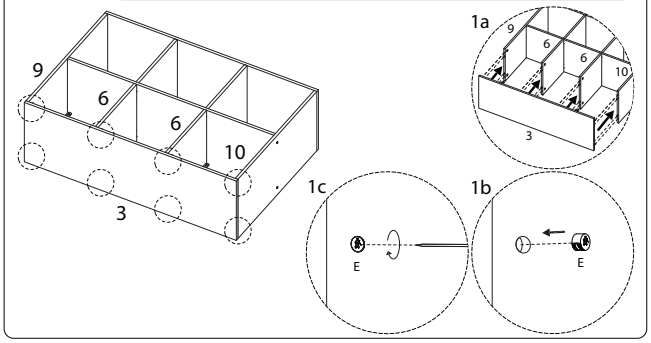
x 8



8

E

x 8



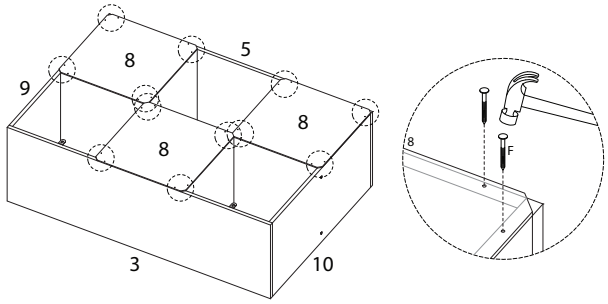
9

8

x 3

F

x 24



10

1

x 2

2

x 2

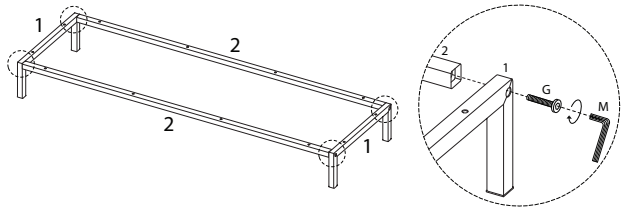
G

M6 x 30

x 4

M

x 1

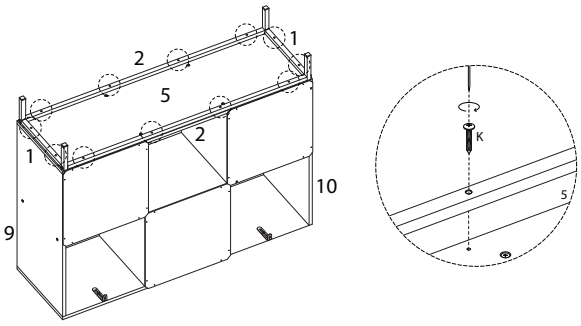


11

K

M4 x 25

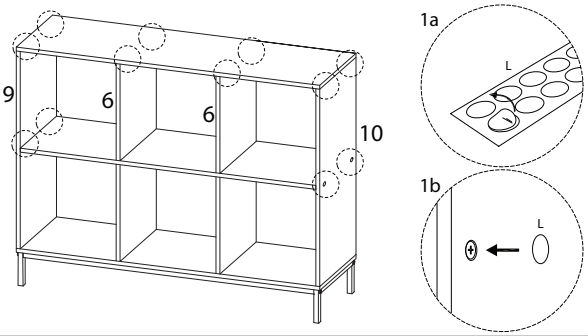
x 12



12

L

x 12



13

A

M4 x 35

x 2

J

x 2

