MINER

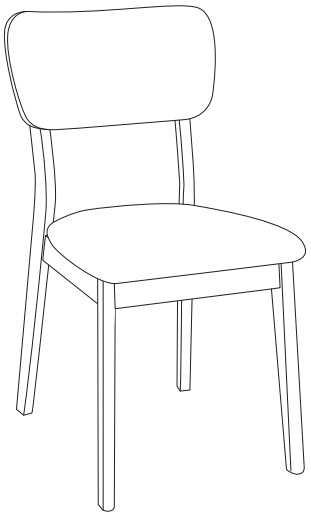

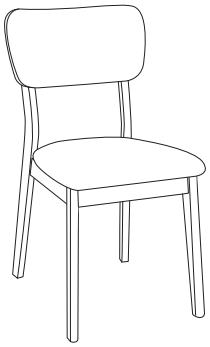

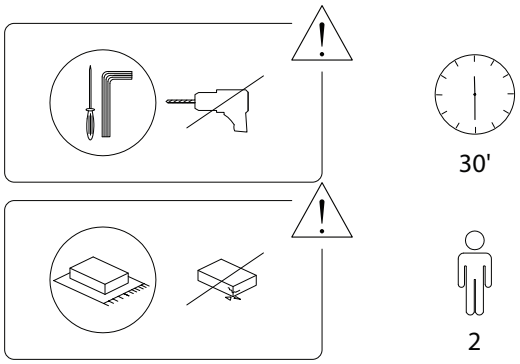

1/4

A	B	C1	C2	D
x 1	x 1	x 1	x 1	x 1

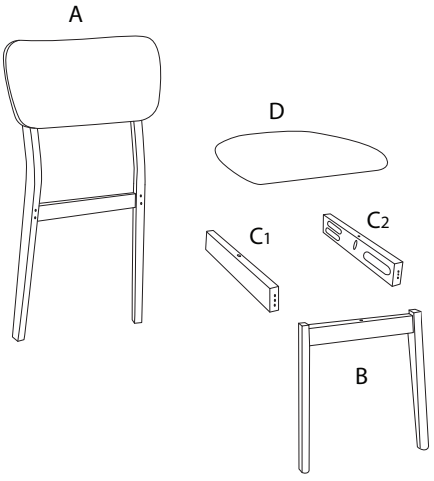

1	2	3	4	5
M4 x 30	M6 x 50			
x 3	x 6	x 6	x 4	x 1

2/4

1

C1	C2	4
x 1	x 1	x 4

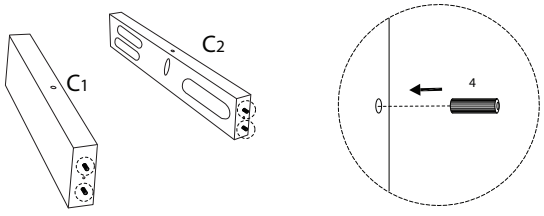

2

A	B	2	3	5
x 1	x 1	M6 x 50 x 6	x 6	x 1

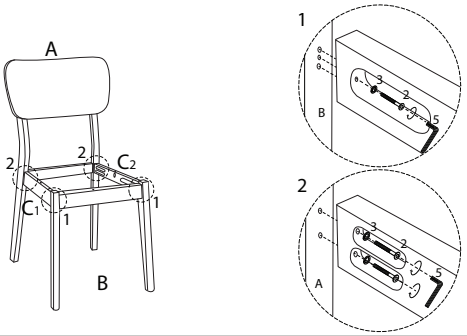

3/4

3

D	1
	
x 1	x 3

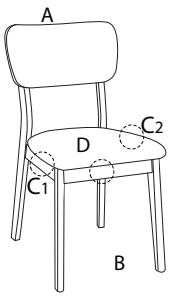

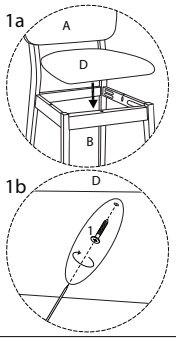

2265/MINER/270524/