

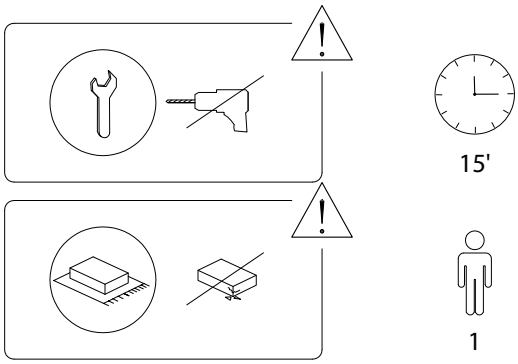

1/4

1502/AYAPAL/060421/

A	B	C	D
x 2	x 2	x 3	x 2

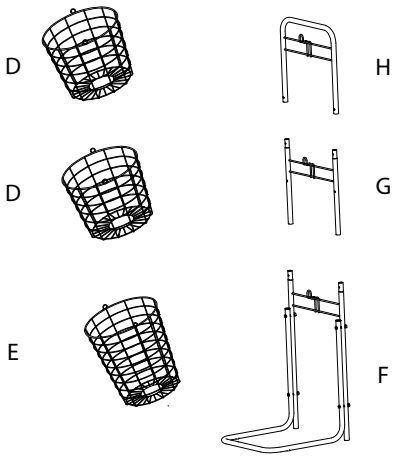

E	F	G	H	I
x 1	x 1	x 1	x 1	x 1

2/4

1502/AYAPAL/060421/

1

A	B	F	I
x 2	x 2	x 1	x 1

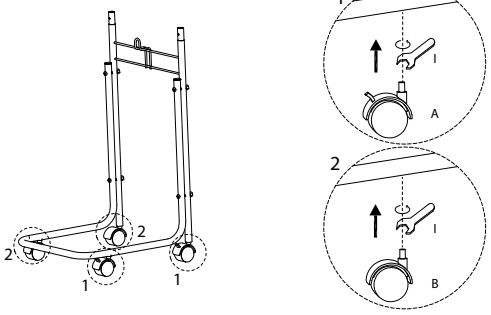

2

G	H
x 1	x 1

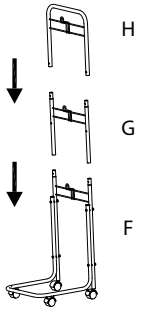

3/4

1502/AYAPAL/060421/

3

C	D	E
x 3	x 2	x 1

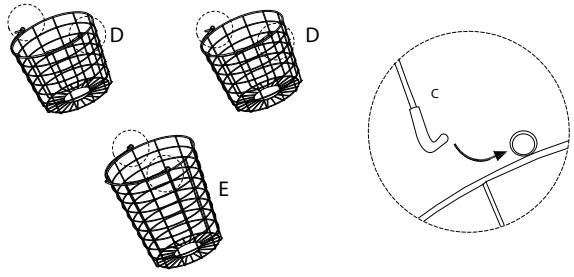

4

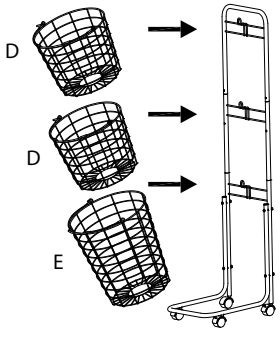

4/4

1502/AYAPAL/060421/