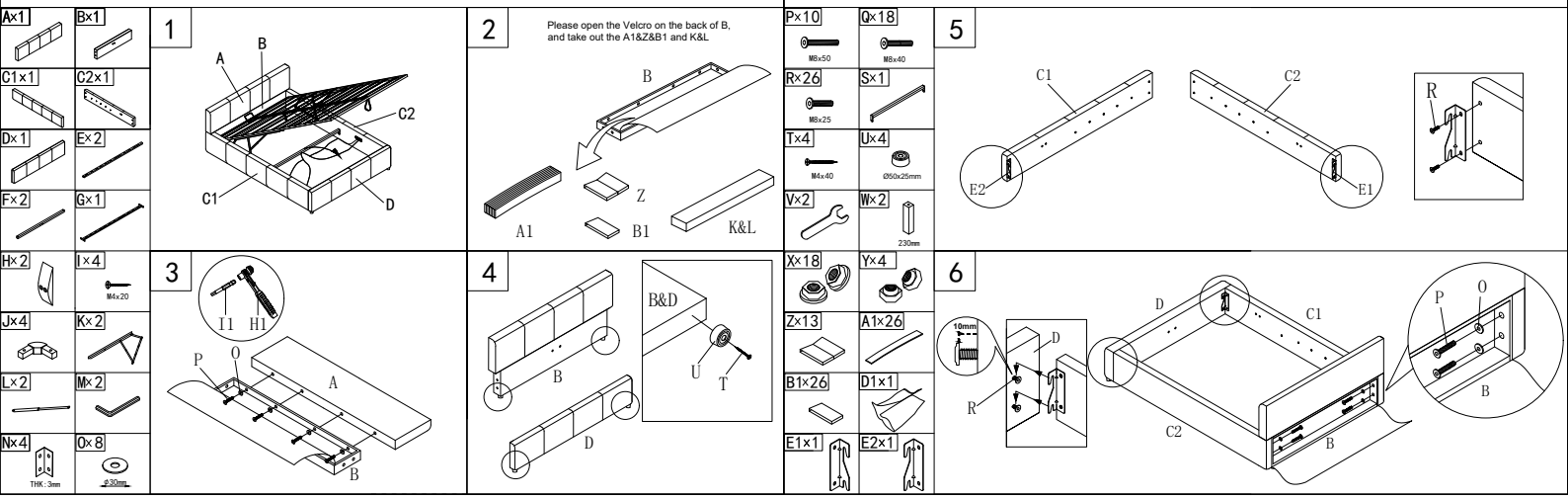
Ax1
Bx1
C1x1
C2x1
Dx1
Ex2
Fx2
Gx1
Hx2
Ix4
M4x20
Jx4
Kx2
Lx2
Mx2
Nx4
THK. 3mm
Ox8
ø30mm
1
A
B
C2
C1
D
2
Please open the Velcro on the back of B, and take out the A1&Z&B1 and K&L
B
Z
A1
B1
K&L
3
I1
H1
P
O
A
B
4
B&D
B
U
T
D
Px10
M8x50
Qx18
M8x40
Rx26
M8x25
Sx1
Tx4
M4x40
Ux4
Ø50x25mm
Vx2
Wx2
230mm
Xx18
Yx4
Zx13
A1x26
B1x26
D1x1
E1x1
E2x1
5
C1
C2
E2
E1
R
6
10mm
D
R
C1
C2
B
P
O
B

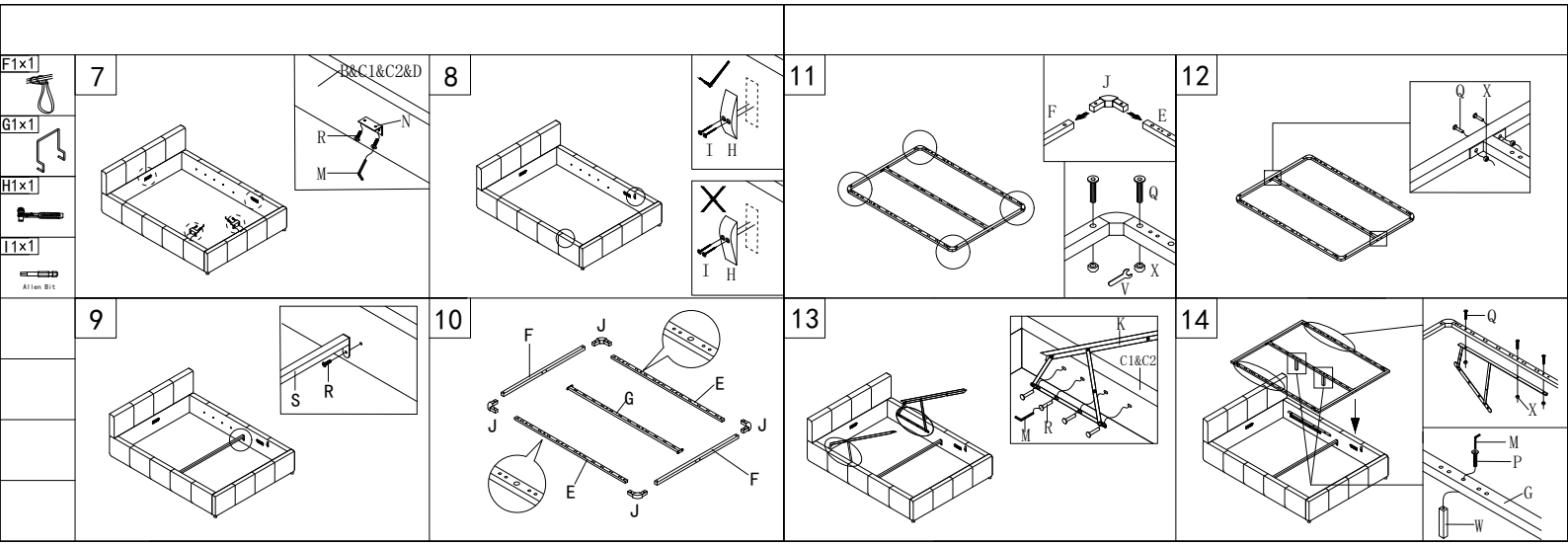
F1x1
G1x1
H1x1
I1x1
Allen Bit
7
D&C1&C2&D
N
R
M
8
I
H
I
H
9
S
R
10
F
J
E
G
J
J
E
F
J
11
J
F
E
Q
V
X
12
Q
X
13
K
C1&C2
M
R
14
Q
X
M
P
G
W

15

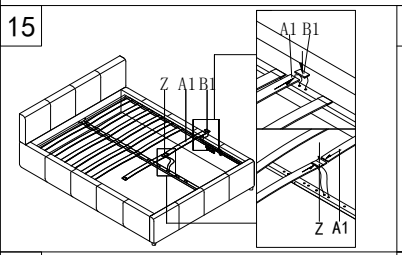

16

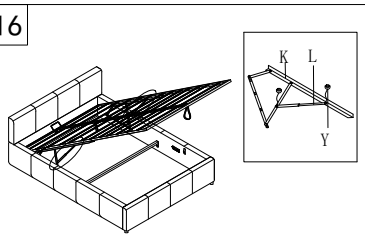

17

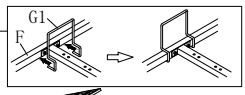

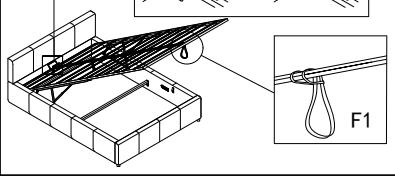

18

