GRAVELINES

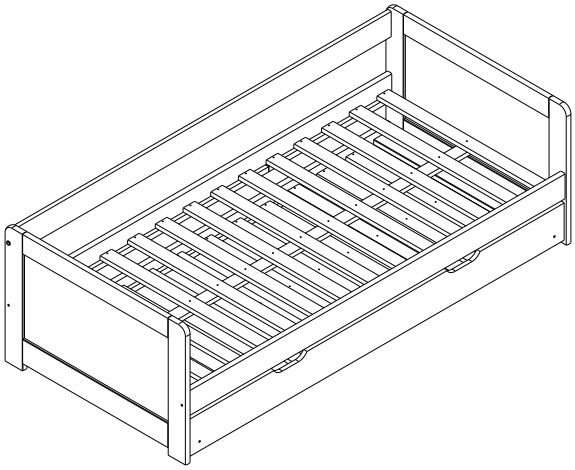

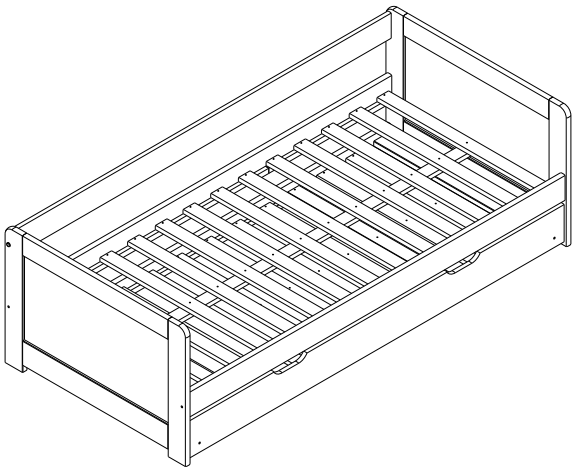

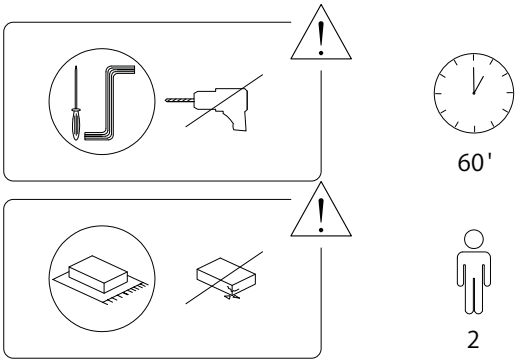

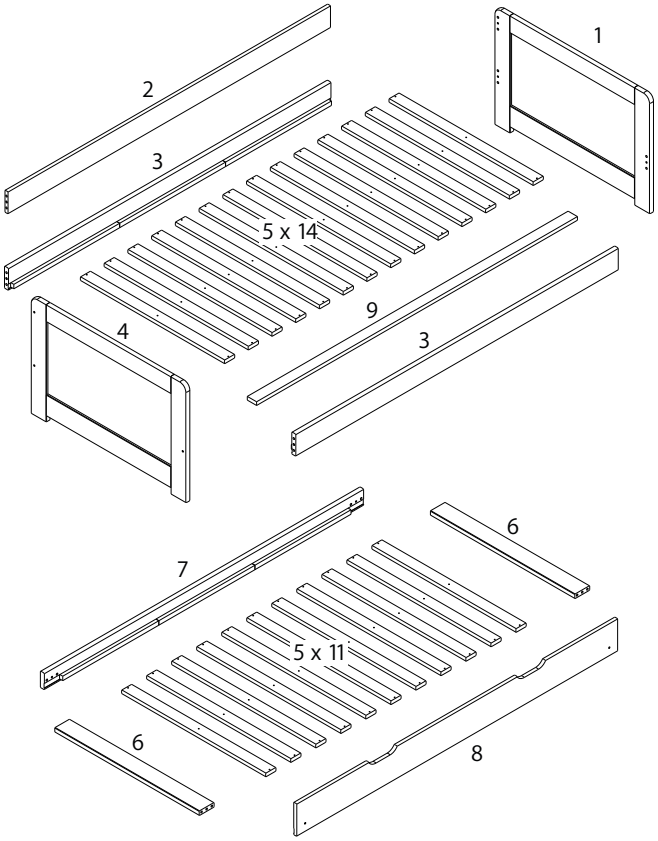

1 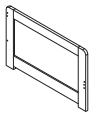 x 1	2 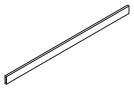 x 1	3 x 2
4 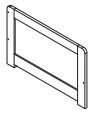 x 1	5 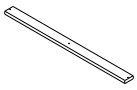 x 25	6 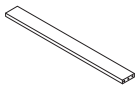 x 2
7 x 1	8 x 1	9 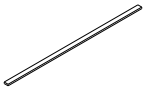 x 1
A x 20	B M7 x 70 x 6	C M6.4 x 60 x 4
D M4 x 30 x 50	E x 1	F x 4

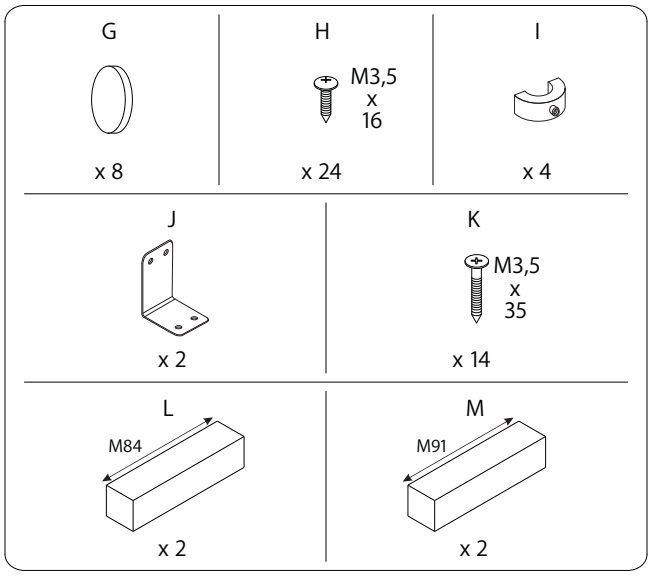

Beliani
2269/GRAVELINES/250225/

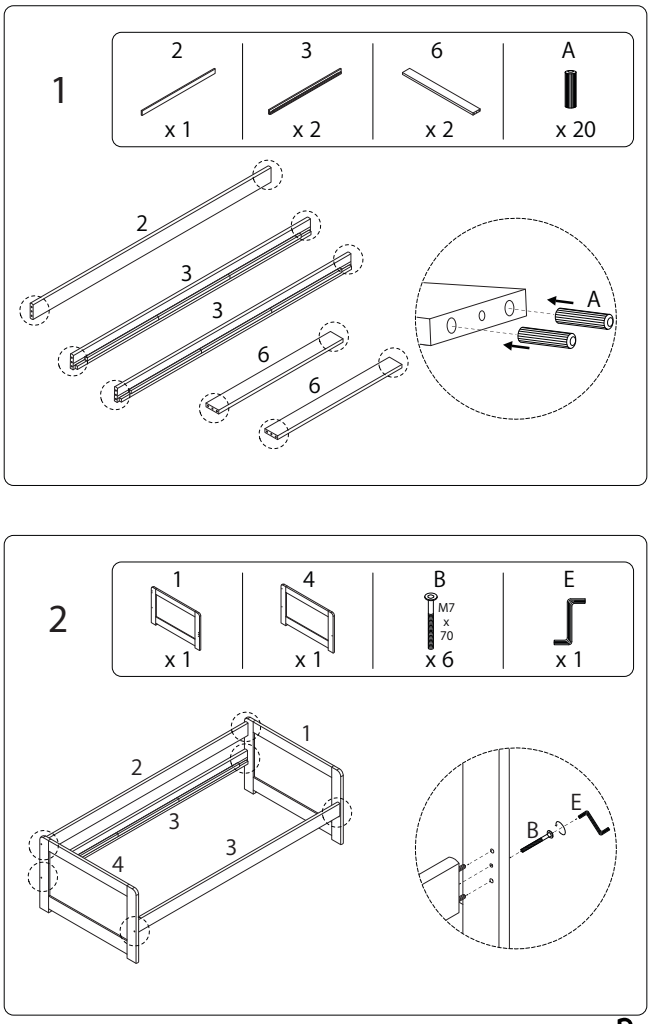

Beliani
2269/GRAVELINES/250225/

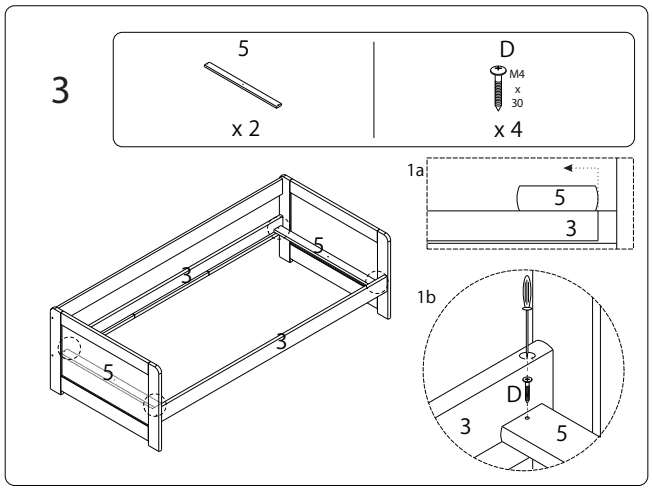

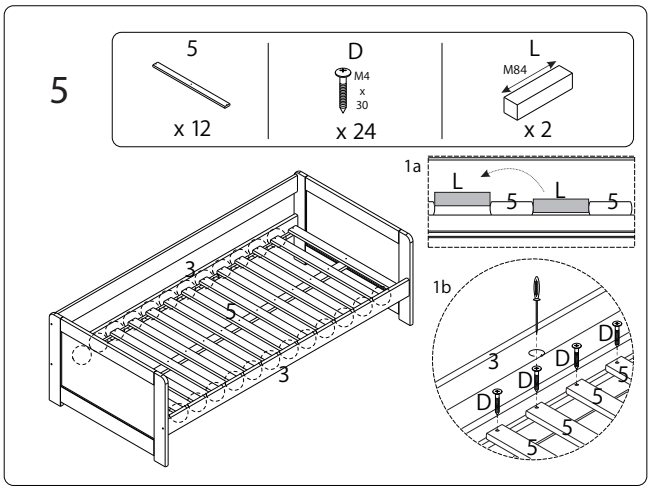

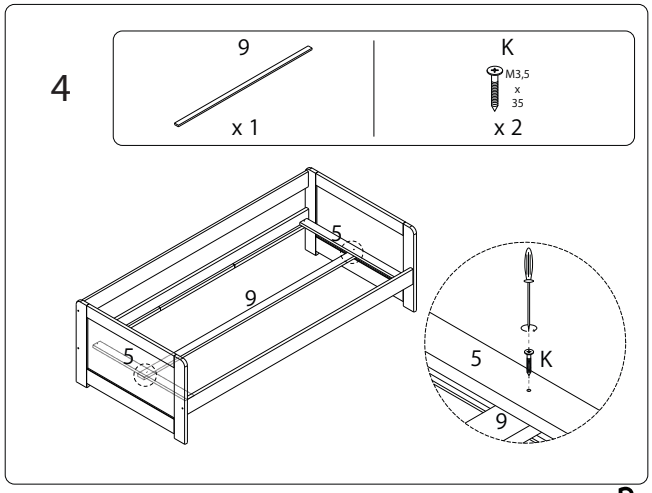

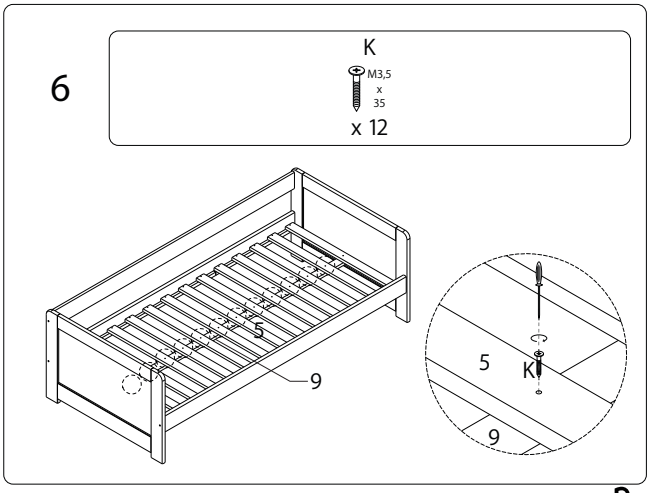

Beliani
2269/GRAVELINES/250225/

Beliani
2269/GRAVELINES/250225/

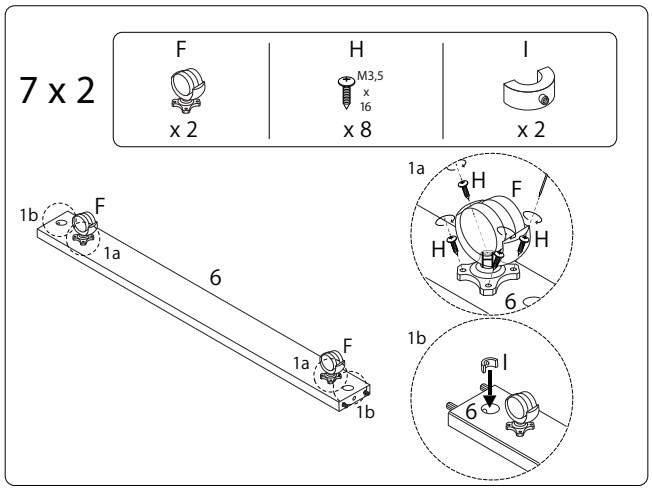

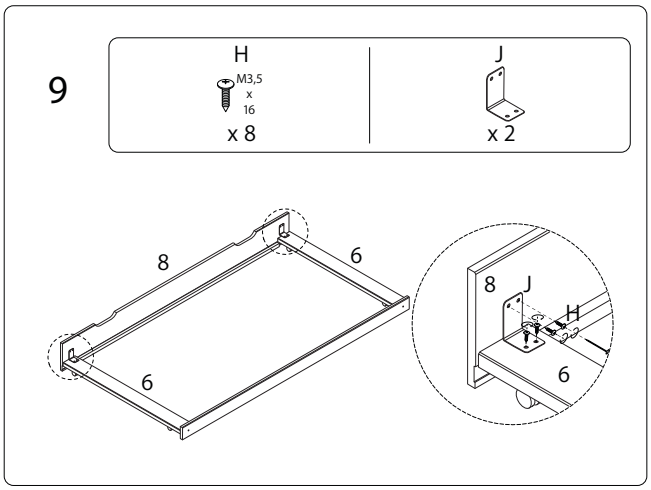

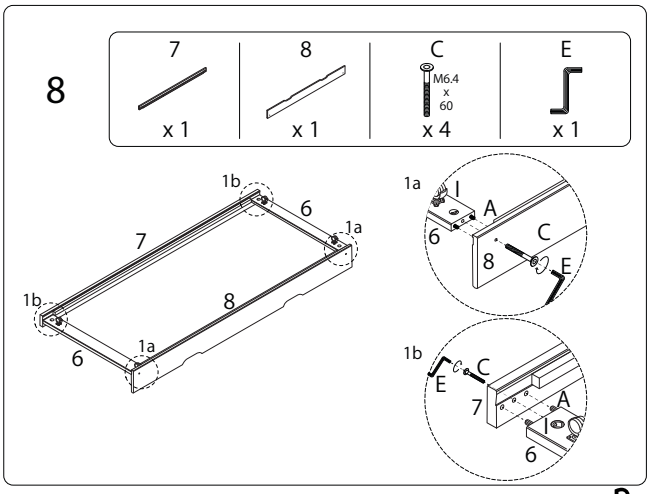

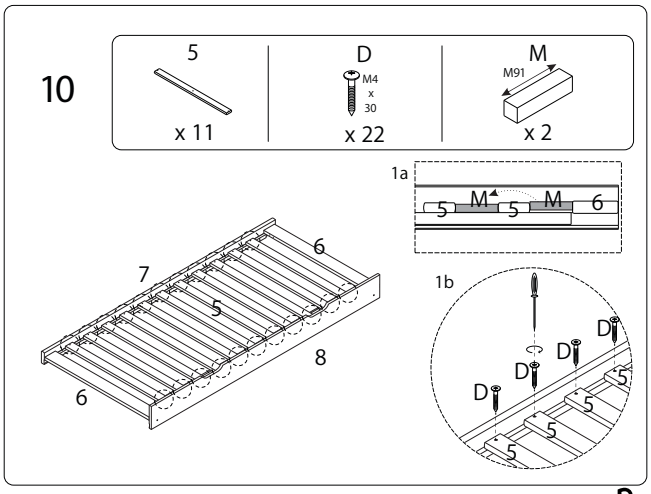

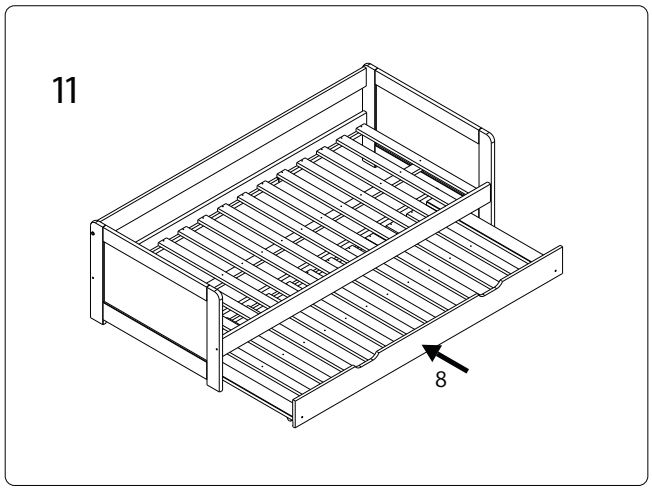

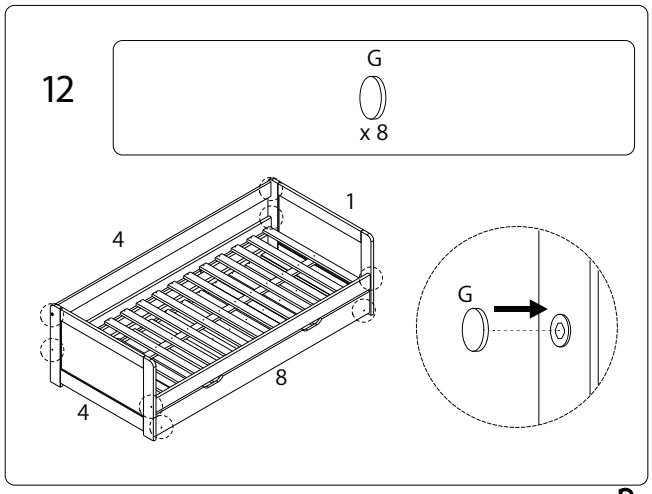

Schweiz, Suisse, Svizzera	Nederland	Norge	Slovensko
mail@beliani.ch	mail@beliani.nl	mail@beliani.no	mail@beliani.sk
tel. +41 43 508 22 33	tel. +31 38 744 0103	tel. +47 21 56 99 75	tel. +421 232784612
Deutschland	France	Sverige	Magyarország
mail@beliani.de	mail@beliani.fr	mail@beliani.se	mail@beliani.hu
tel. +49 221 6778 9927	tel. +33 1 87 39 86 15	tel. +46 8 446 891 58	tel. +36 (1) 211 4034
Österreich	Italia	Suomi	România
mail@beliani.at	mail@beliani.it	mail@beliani.fi	mail@beliani.ro
tel. +43 1 375 00 57	tel. +39 06 56548602	tel. +358 9 4245 0464	tel. +40 316 300 677
United Kingdom	España	Danmark	België, Belgique
mail@beliani.co.uk	mail@beliani.es	mail@beliani.dk	mail@beliani.be
tel. +44 20 3318 8222	tel. +34 932 714 061	tel. +45 89 88 10 86	tel. +32 28085614
Polska	Portugal	Česká Republika	
mail@beliani.pl	mail@beliani.pt	mail@beliani.cz	
tel. +48 91 350 83 60	tel. +351 22 145 07 45	tel. +420 228881514	

Representative in EU:

Beliani Kundendienst GmbH
Leverkusener Str. 31
16303 Schwedt
Germany