MIDWOOD

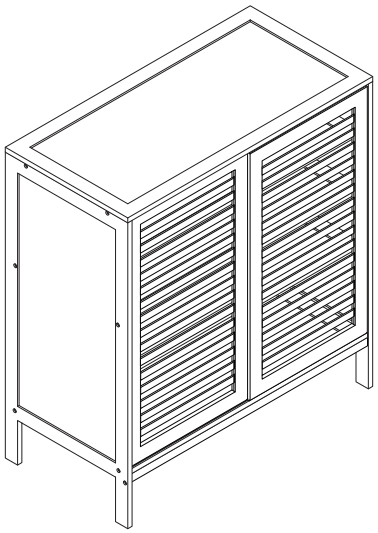

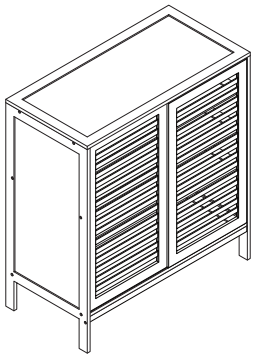

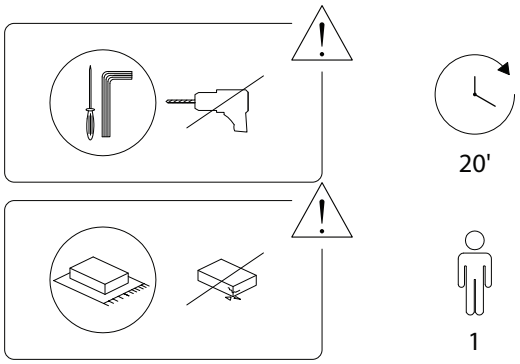

1/9

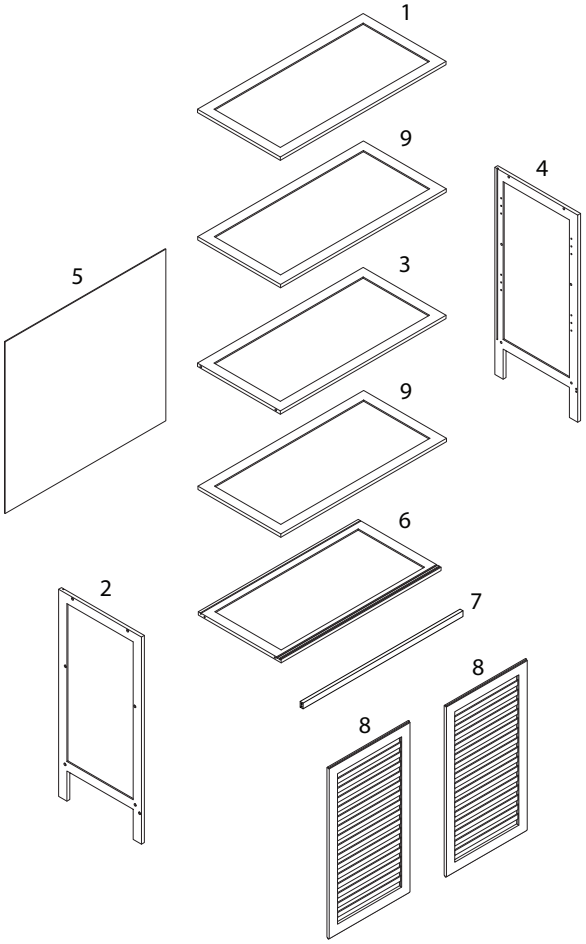

1 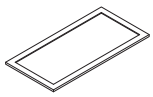 x 1	2  x 1	3 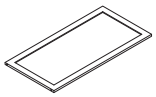 x 1	4  x 1
5 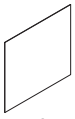 x 1	6 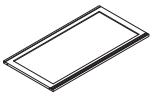 x 1	7 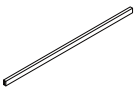 x 1	8  x 2
9 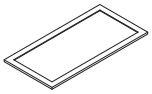 x 2	A 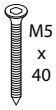 x 10	B  x 2	C  x 8
D  x 8	E  x 8	F  x 5	G  x 1
H  x 1	I  x 2	J  x 1	K  x 1

1

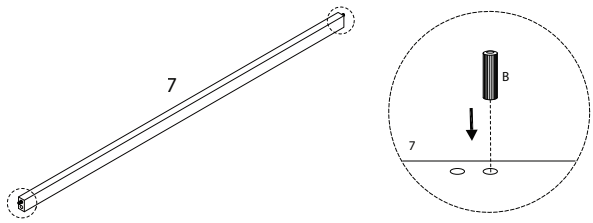
7
x 1
B
x 2

7
B
7

2

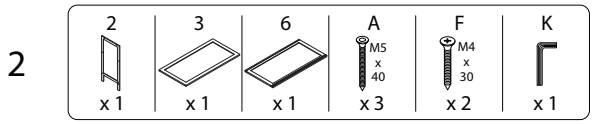
2
x 1
3
x 1
6
x 1
A
M5
x
40
x 3
F
M4
x
30
x 2
K
x 1

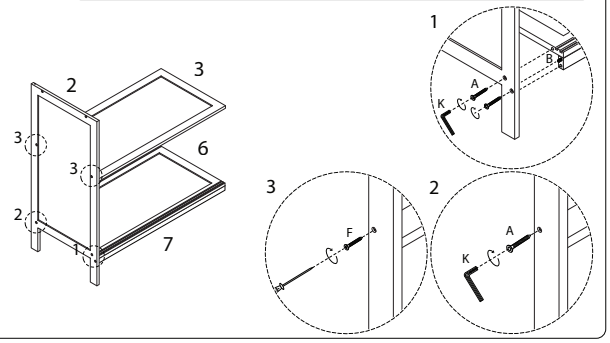
2
3
3
6
3
2
7
1
1
B
A
K
3
F
2
A
K

3

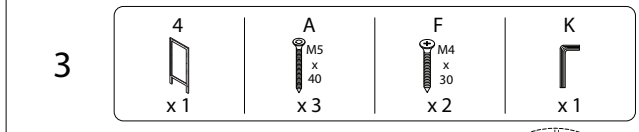
4
x 1
A
M5
x
40
x 3
F
M4
x
30
x 2
K
x 1

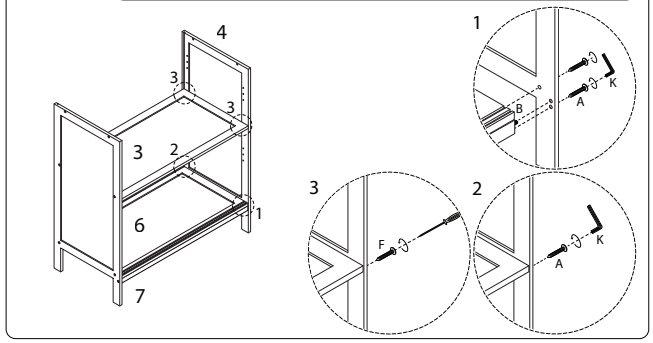
4
3
3
3
2
6
1
7
1
B
A
K
3
F
2
A
K

4

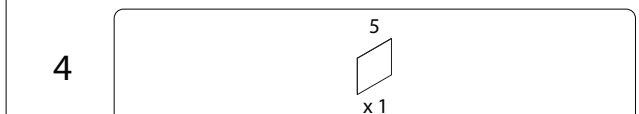
5
x 1

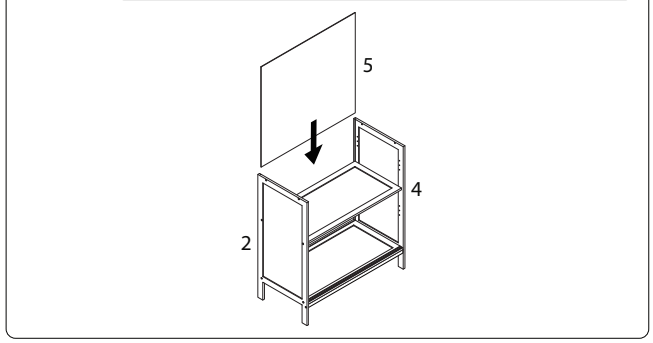
5
4
2

5

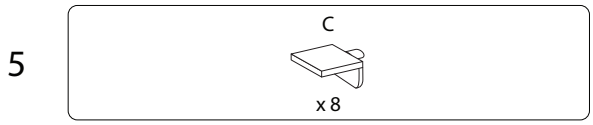
C
x 8

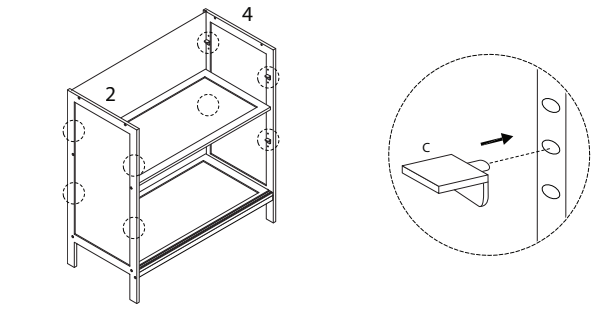
4
2
C

7

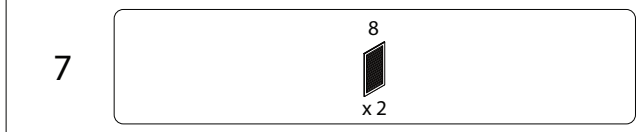
8
x 2

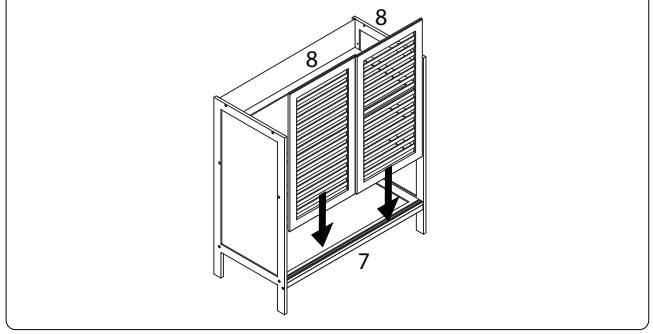
8
8
7

6

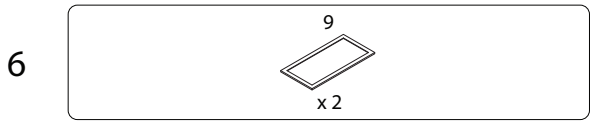
9
x 2

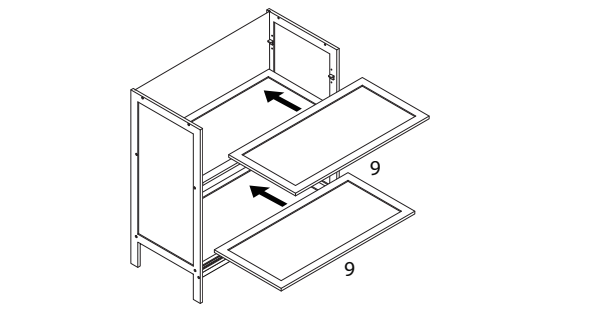
9
9

8

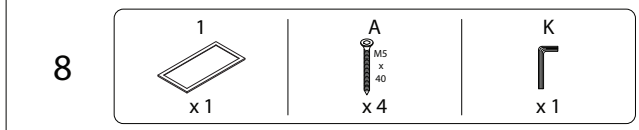
1
x 1
A
M5
x
40
x 4
K
x 1

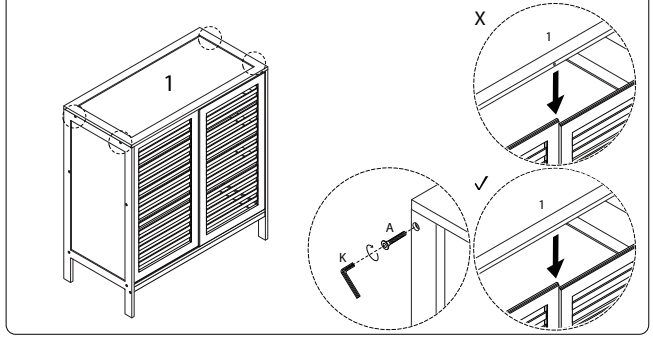
1
X
1
✓
1
K
A

9

D
x 8

E
M3 x 14
x 8

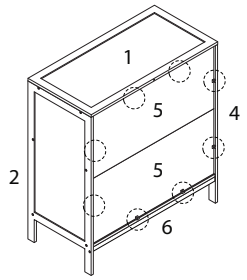

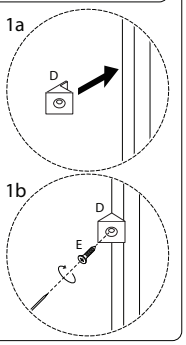

10

H
x 1

I
x 1

J
M3 x 12
x 1

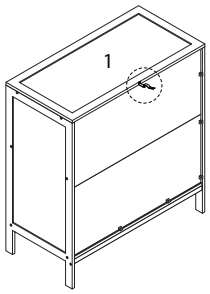

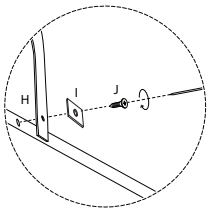

11

G
x 2

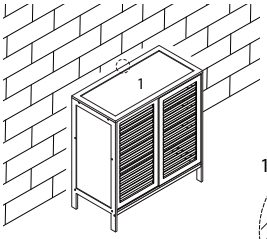

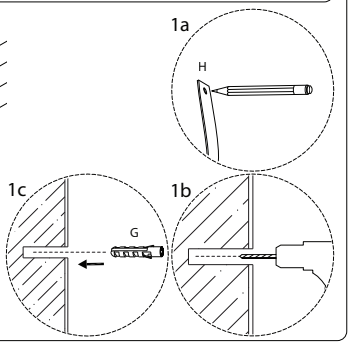

12

F
M4 x 30
x 1

I
x 1

