APPROUAGUE

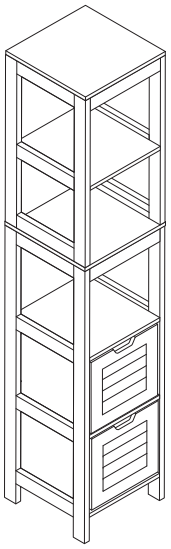

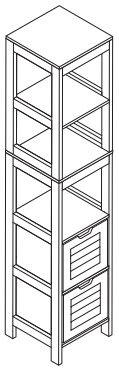

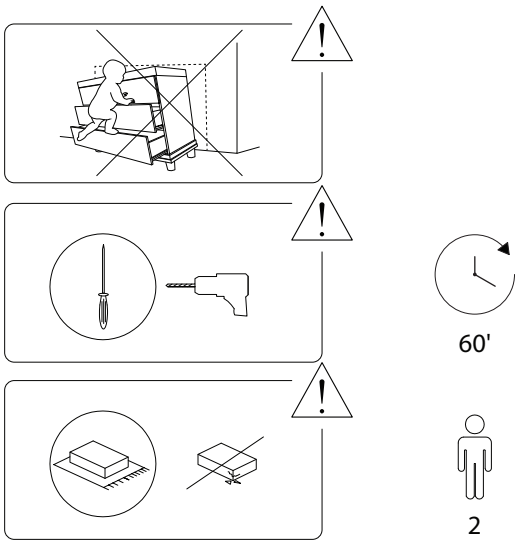

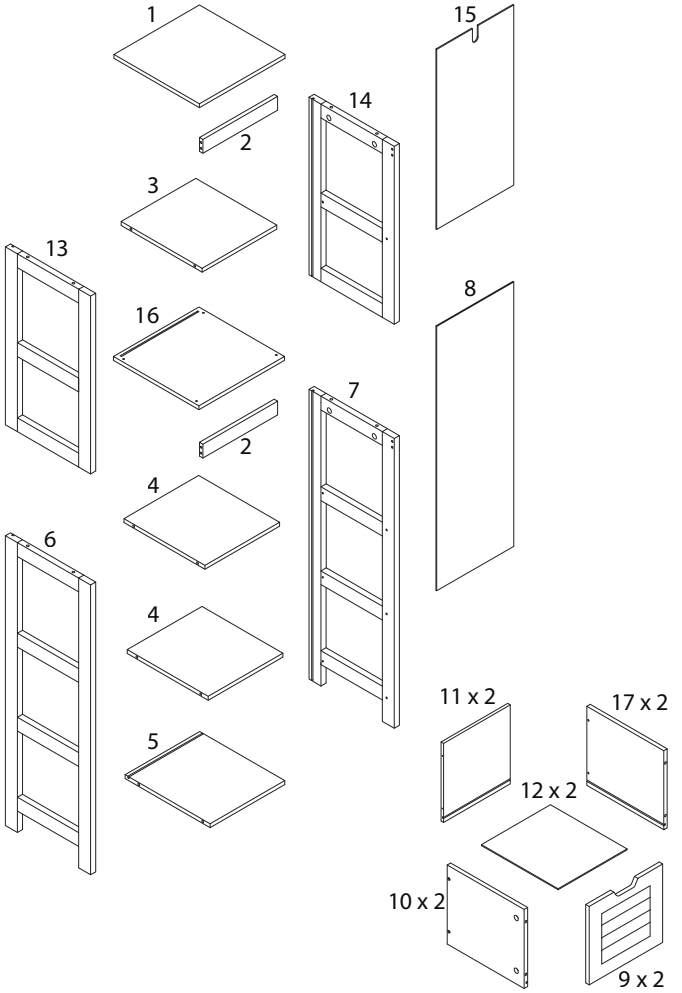

1 x 1	2 x 2	3 x 1
4 x 2	5 x 1	6 x 1
7 x 1	8 x 1	9 x 2
10 x 2	11 x 2	12 x 2	13 x 1
14 x 1	15 x 1	16 x 1	17 x 2

A	B	C
	 M4 x 35	
x 32	x 5	x 8
D	**E**	**F**
 M3 x 25		
x 8	x 1	x 2
G	**H**	**I**
 M4 x 12		 M3 x 12
x 1	x 32	x 4
J	**K**	
		
x 1	x 4	

1 x 2

9	A
 x 1	 x 4

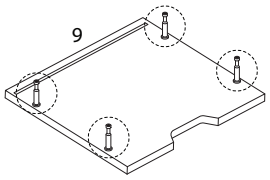

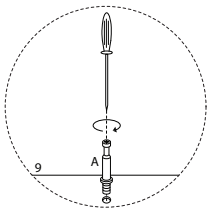

2 x 2

10	11	17	D
 x 1	 x 1	 x 1	 M3 x 25 x 4

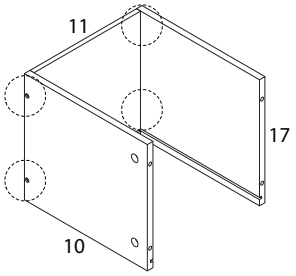

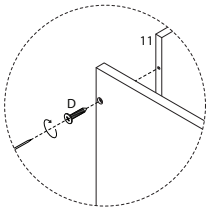

3 x 2

12
 x 1

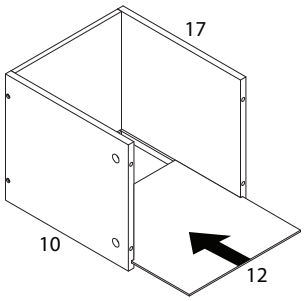

4 x 2

B
 x 4

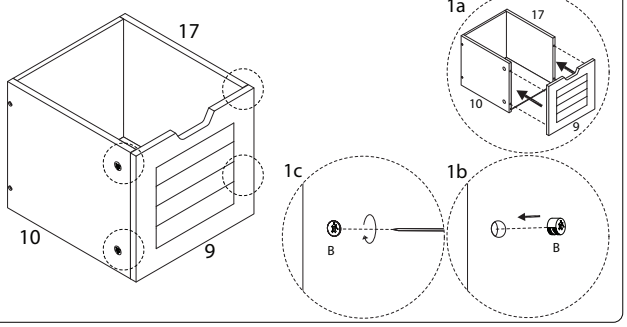

5

6	7	13	14	A
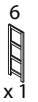 x 1	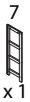 x 1	 x 1	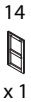 x 1	 x 16

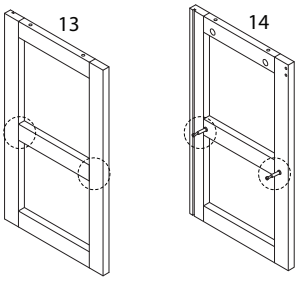

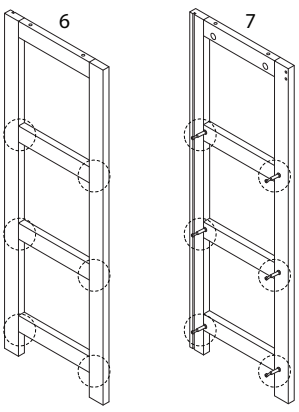

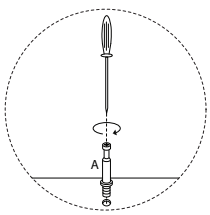

6 x 2

2 x 1

C x 4

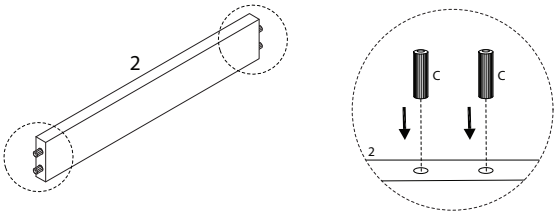

8

16 x 1

B M4 x 35 x 4

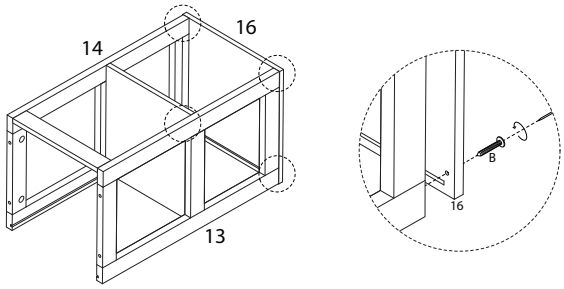

7

3 x 1

H x 4

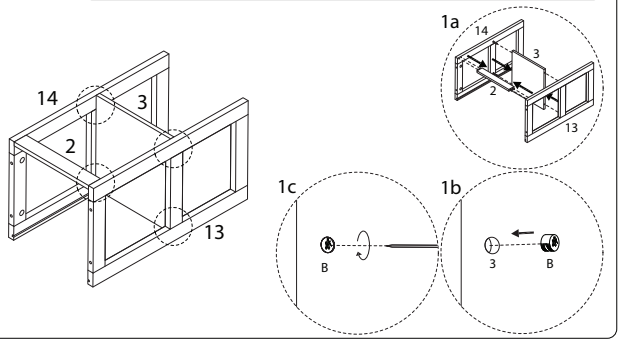

9

15 x 1

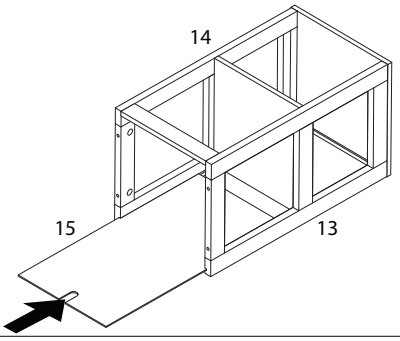

10

1 x 1

A x 4

G M4 x 12 x 1

J x 1

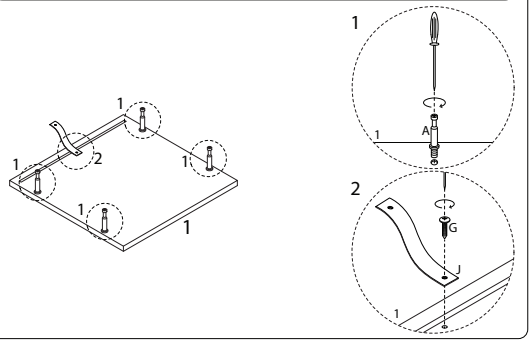

12

A x 4

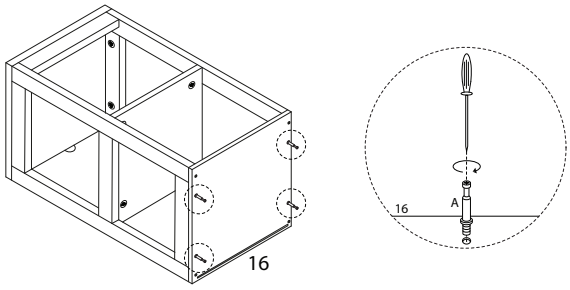

11

H x 4

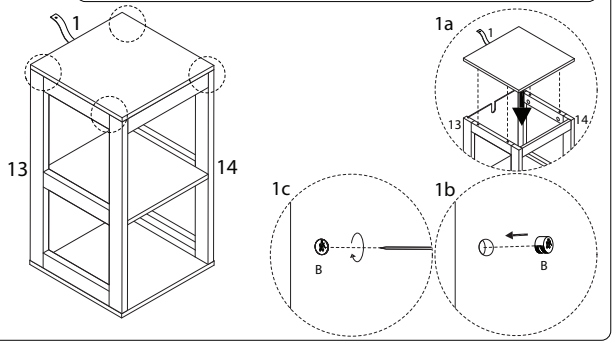

13

4 x 2

5 x 1

H x 12

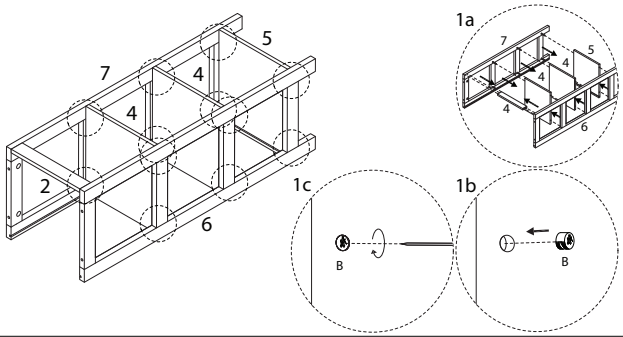

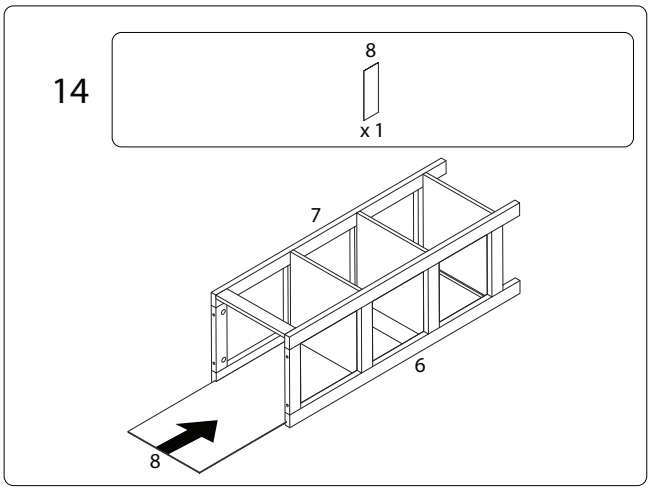
14
8
x 1
7
6
8

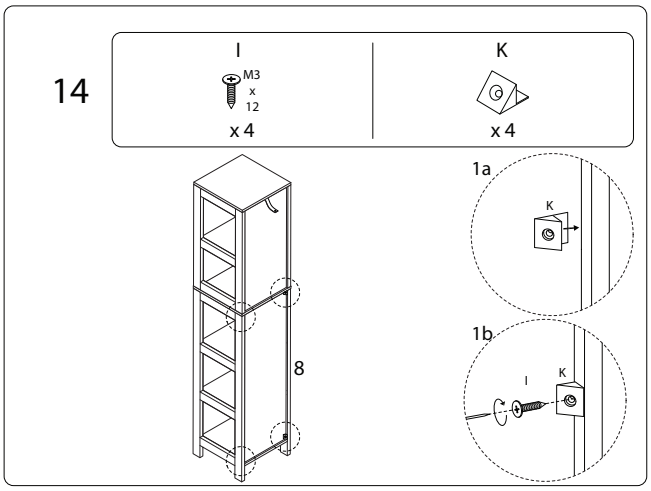
14
I
M3
x
12
x 4
K
x 4
8
1a
K
1b
I
K

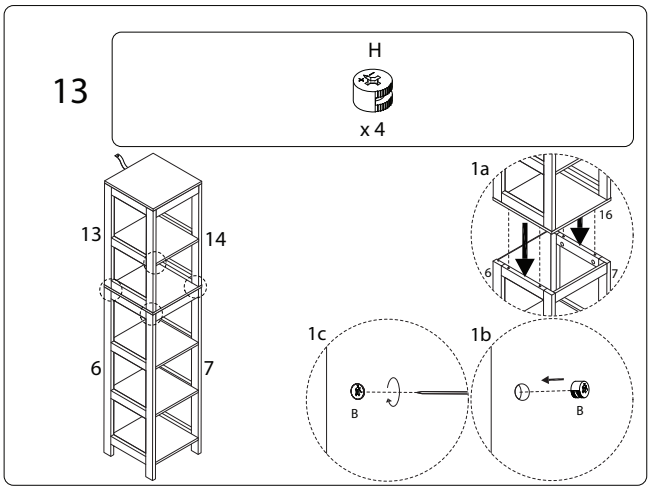
13
H
x 4
13
14
6
7
1a
16
6
7
1c
1b
B
B

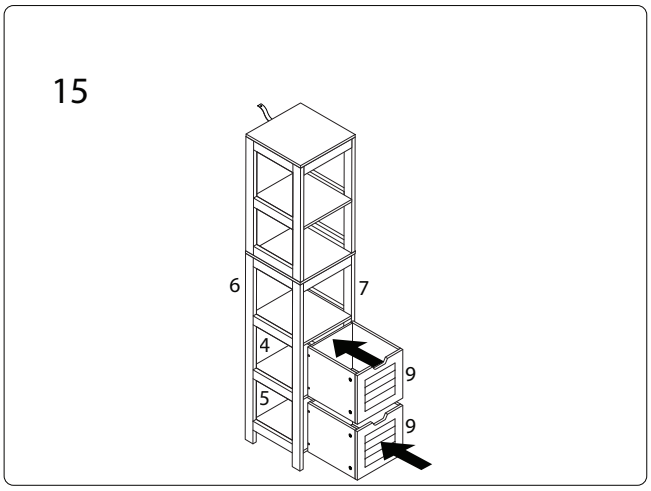
15
6
7
4
9
5
9

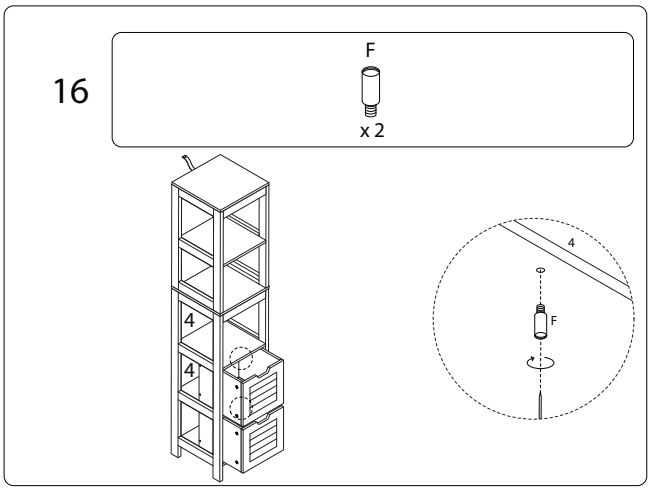
16
F
x 2
4
4
4
F

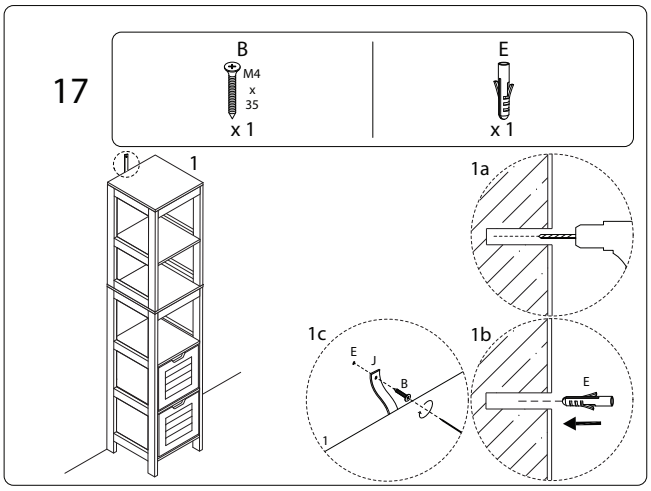
17
B
M4
x
35
x 1
E
x 1
1
1a
1c
E
J
B
1
1b
E