YOUNGSTOWN





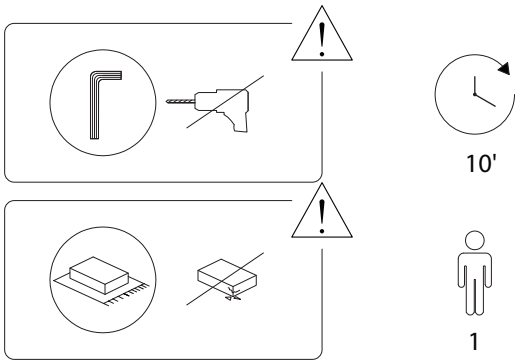

2955/YOUNGSTOWN/300926

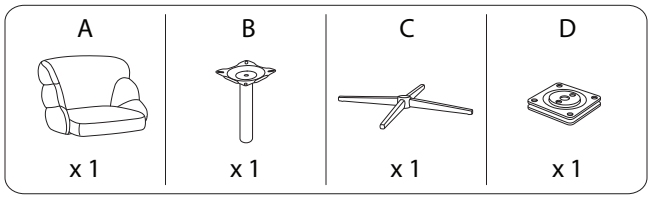

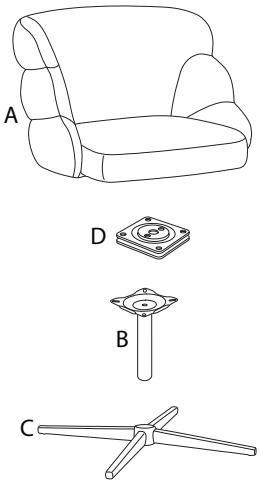

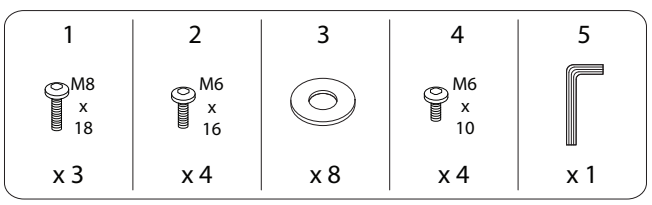

2955/YOUNGSTOWN/300926

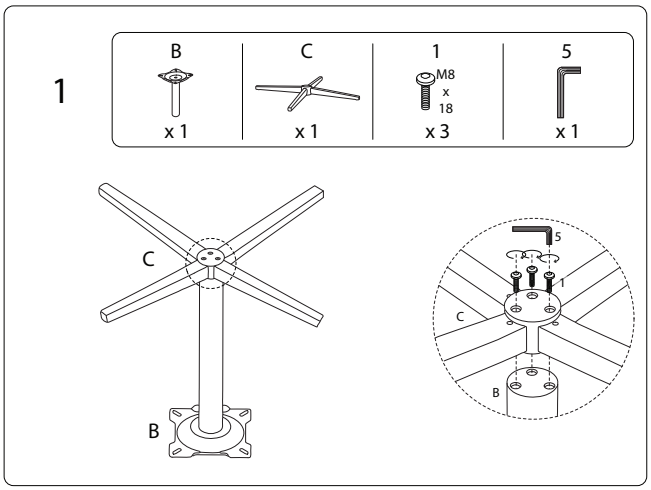

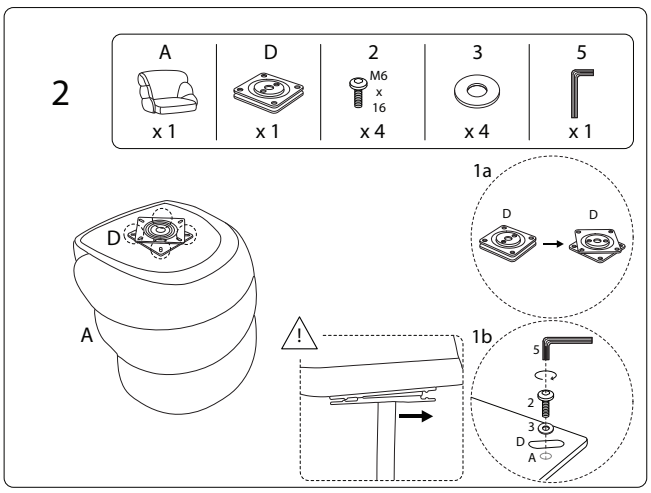

2955/YOUNGSTOWN/300926

3

3	4	5
	 M6 x 10	
x 4	x 4	x 1

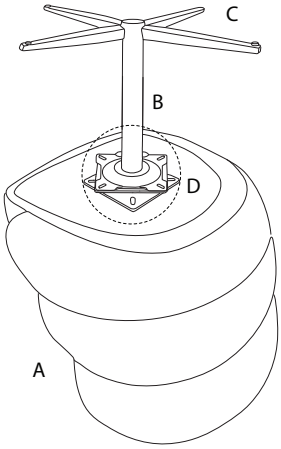

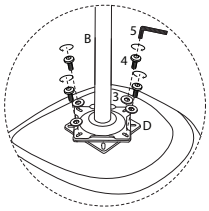

2955/YOUNGSTOWN/300926