LOFOTEN SMALL

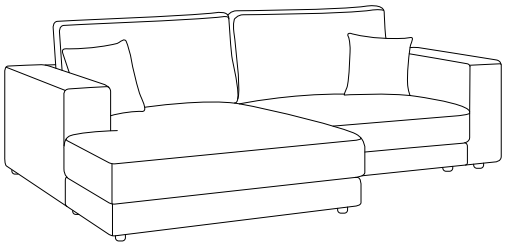

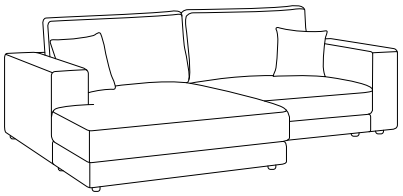

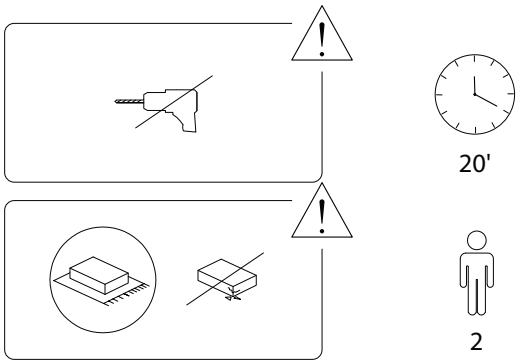

1/6

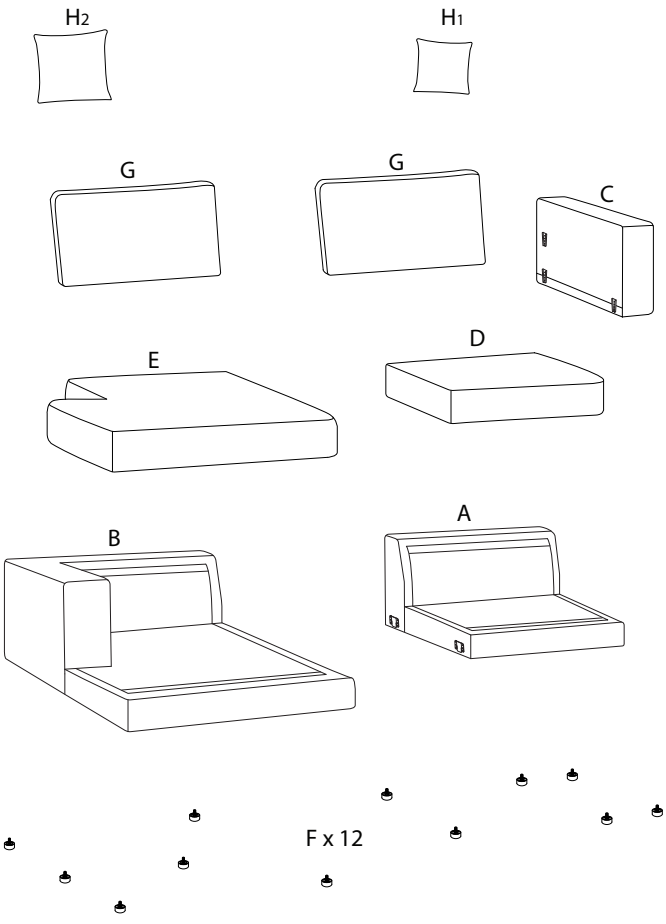

A	B	C
x 1	x 1	x 1
D	E	F
x 1	x 1	x 12
G	H1	H2
x 2	x 1	x 1

30 mm

230/LOFOTEN SMALL/060625/

230/LOFOTEN SMALL/060625/

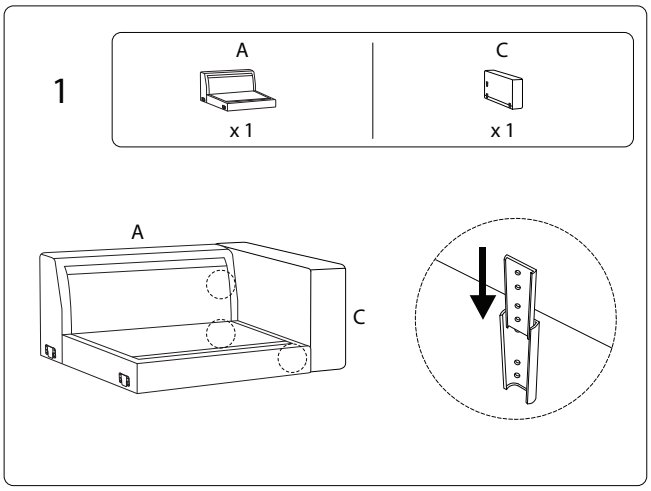
1
A
x 1
C
x 1
A
C

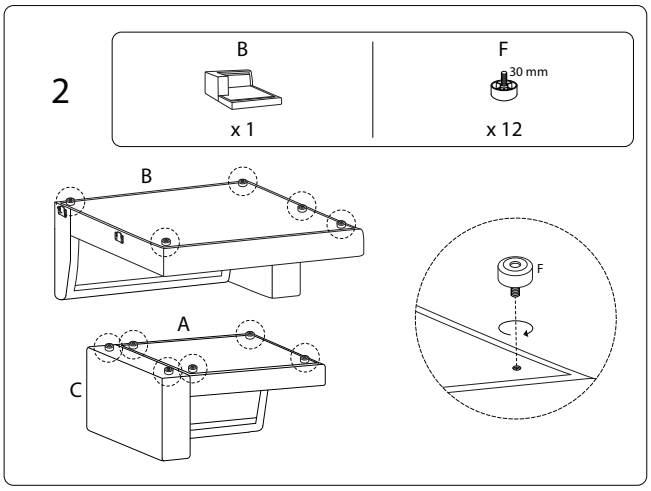
2
B
x 1
F
30 mm
x 12
B
A
C
F

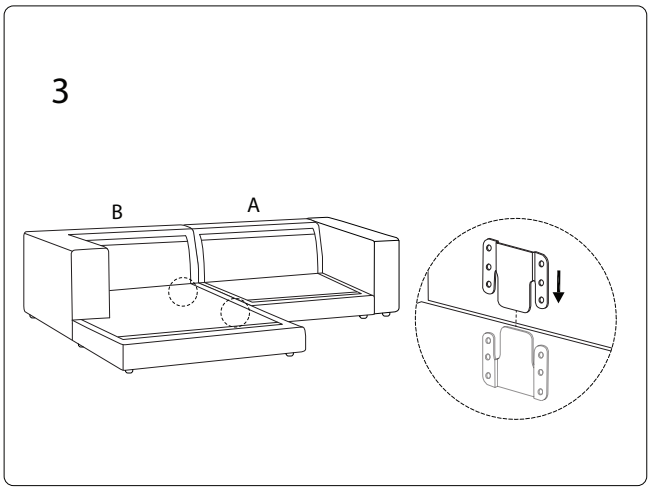
3
B
A

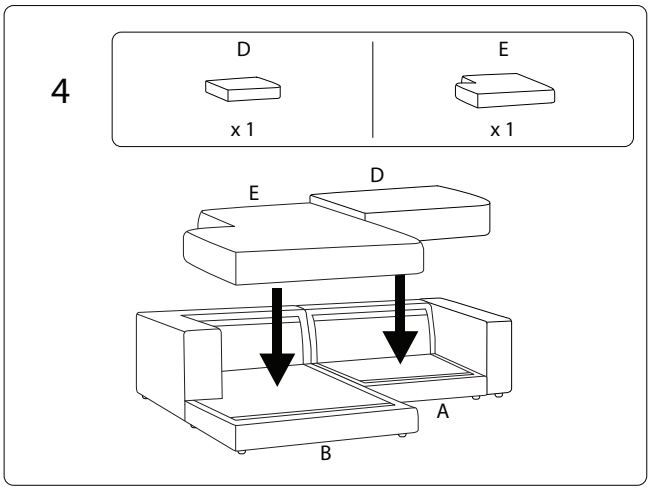
4
D
x 1
E
x 1
E
D
A
B

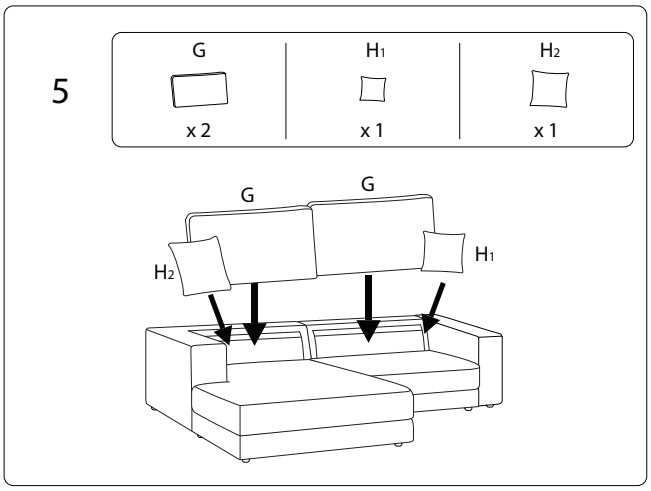
5
G
x 2
H1
x 1
H2
x 1
G
G
H2
H1