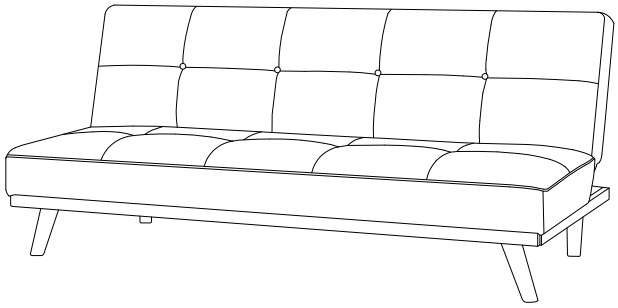

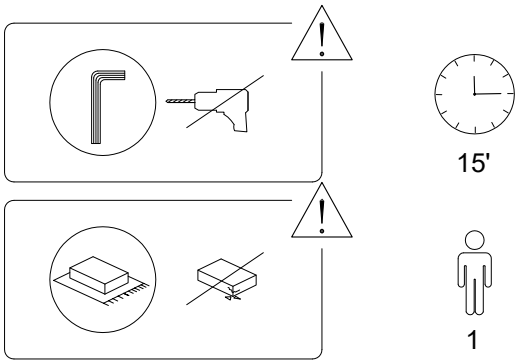

A	B	C
x 1	x 2	x 2

A x 1

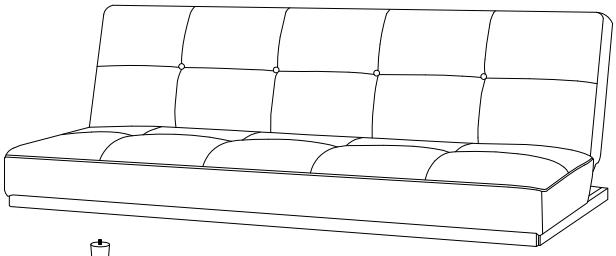

C x 2

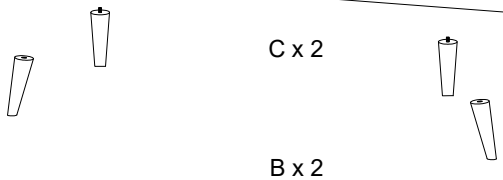

B x 2

D	E	F	G
x 1	Ø8 x 40 x 2	M8 x 65 x 2	x 2

!

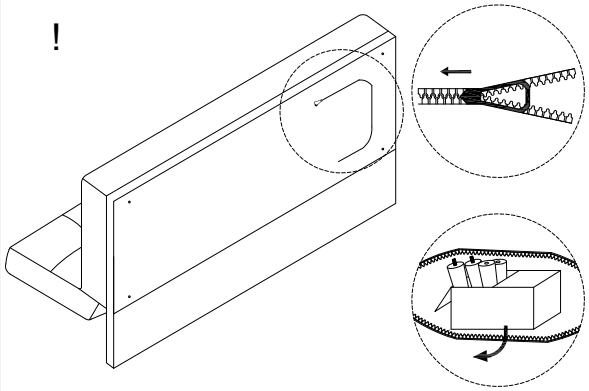

1

B	D	E	F	G
x 2	x 1	Ø8 x 40 x 1	M8 x 65 x 1	x 1

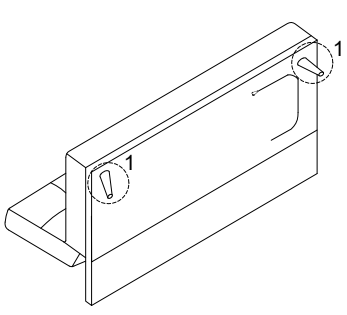

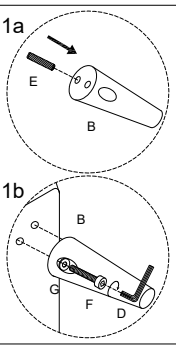

2

C
x 2

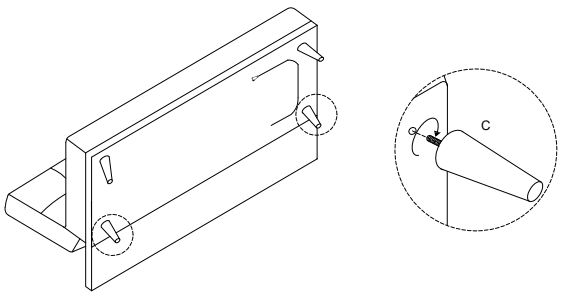

3

