

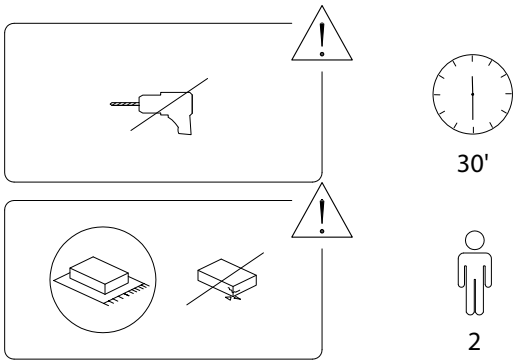
30'
2

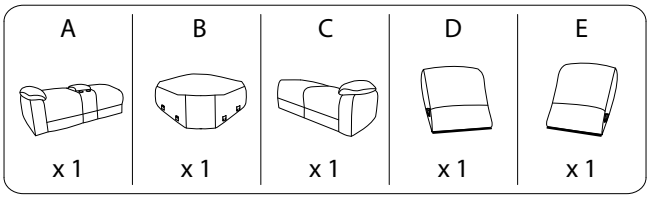
A
B
C
D
E
x 1
x 1
x 1
x 1
x 1

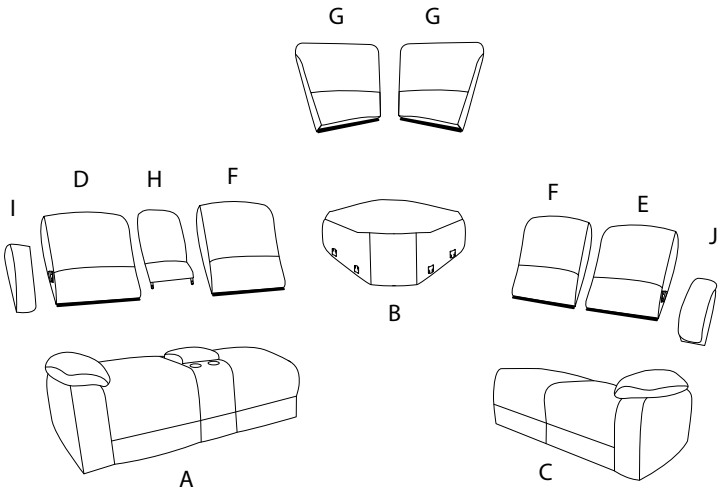
G
G
I
D
H
F
B
F
E
J
A
C

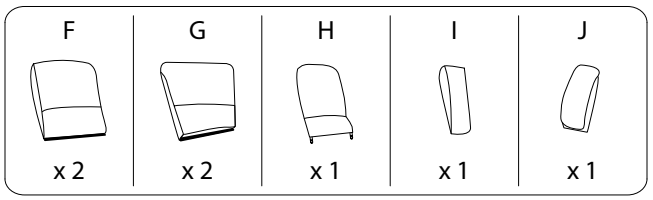
F
G
H
I
J
x 2
x 2
x 1
x 1
x 1

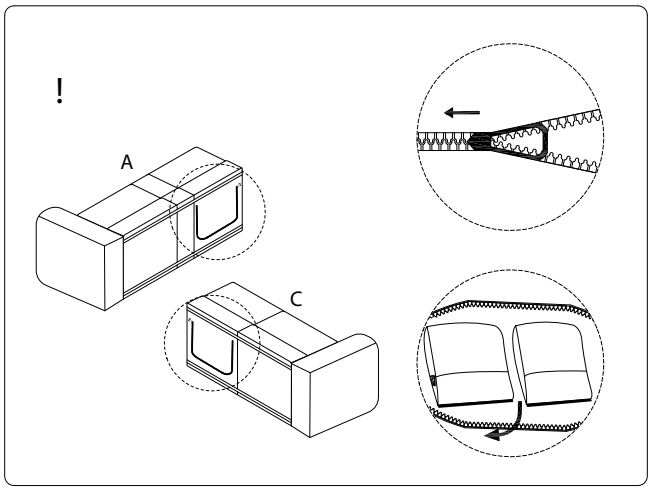
!
A
C

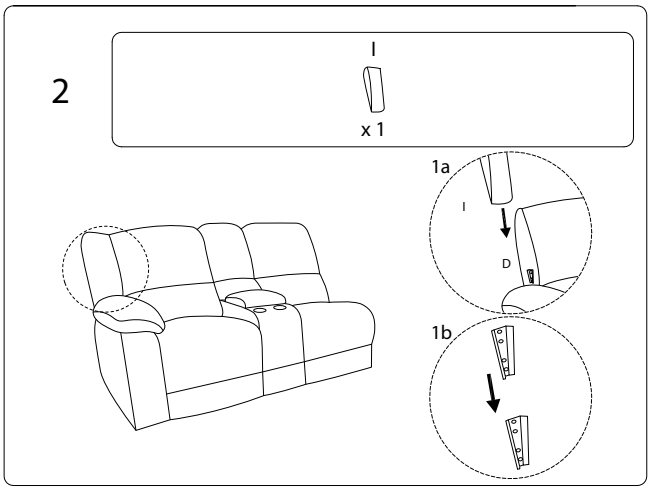
2
I
x 1
1a
I
D
1b

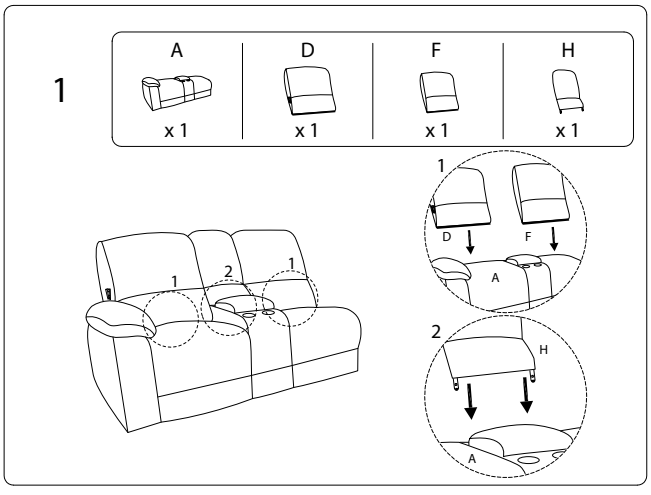
1
A
D
F
H
x 1
x 1
x 1
x 1
1
2
1
1
D
F
A
2
H
A

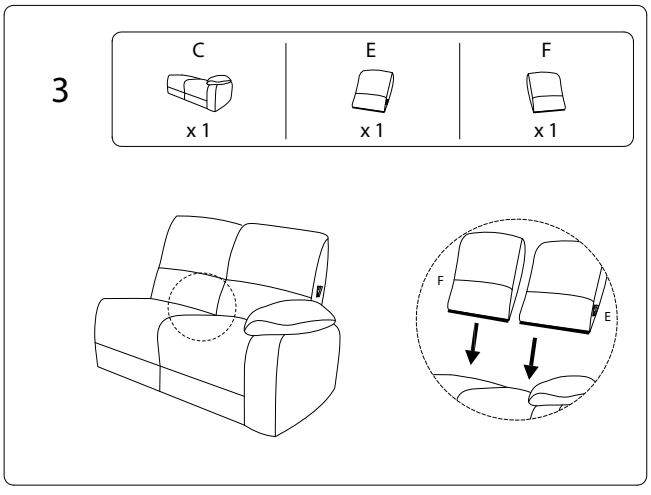
3
C
E
F
x 1
x 1
x 1
F
E

4

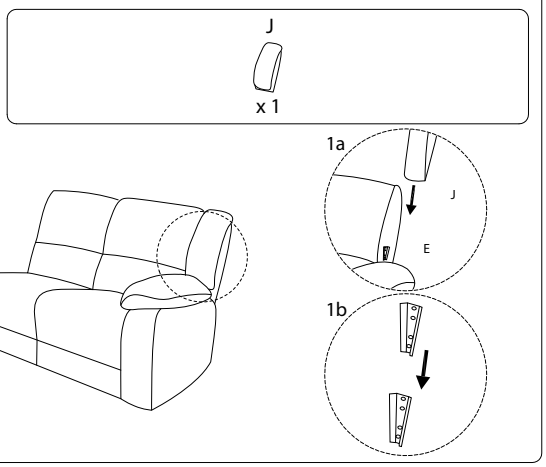

5

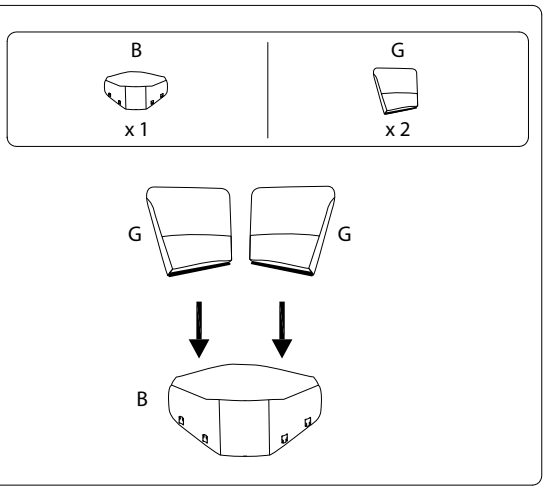

5/7

1501/ROKKE/030821/

6

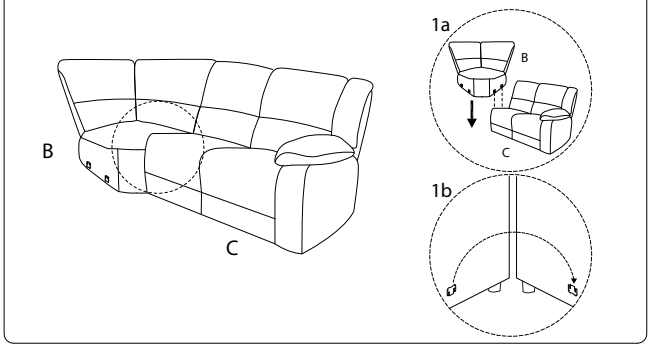

7

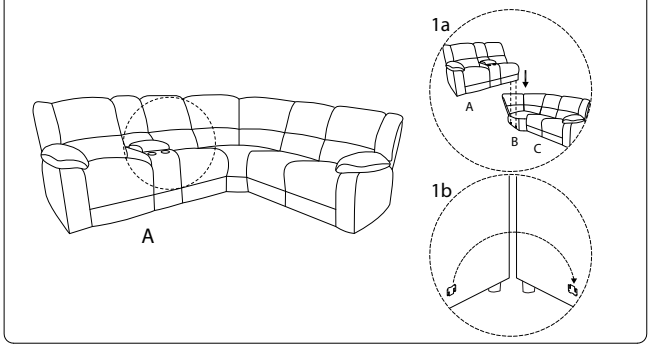

6/7

1501/ROKKE/030821/

!

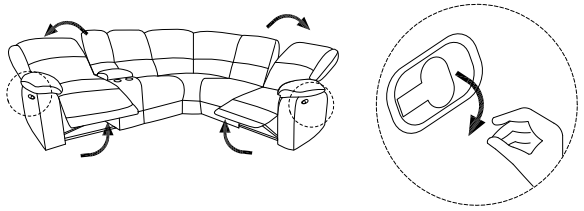

7/7

1501/ROKKE/030821/