BROOME

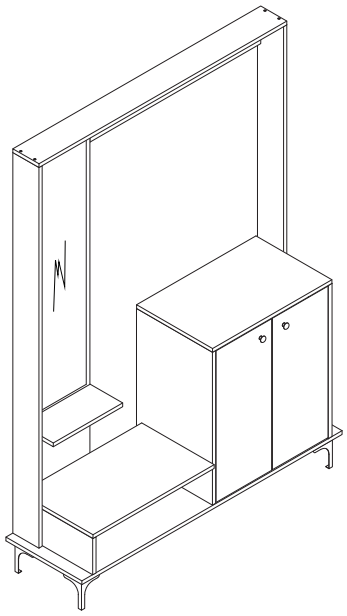

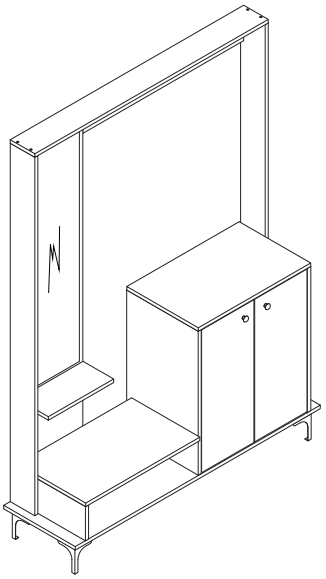

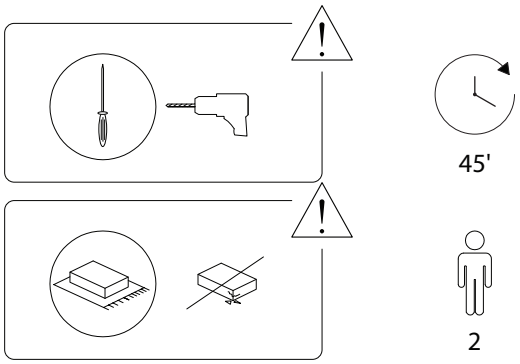

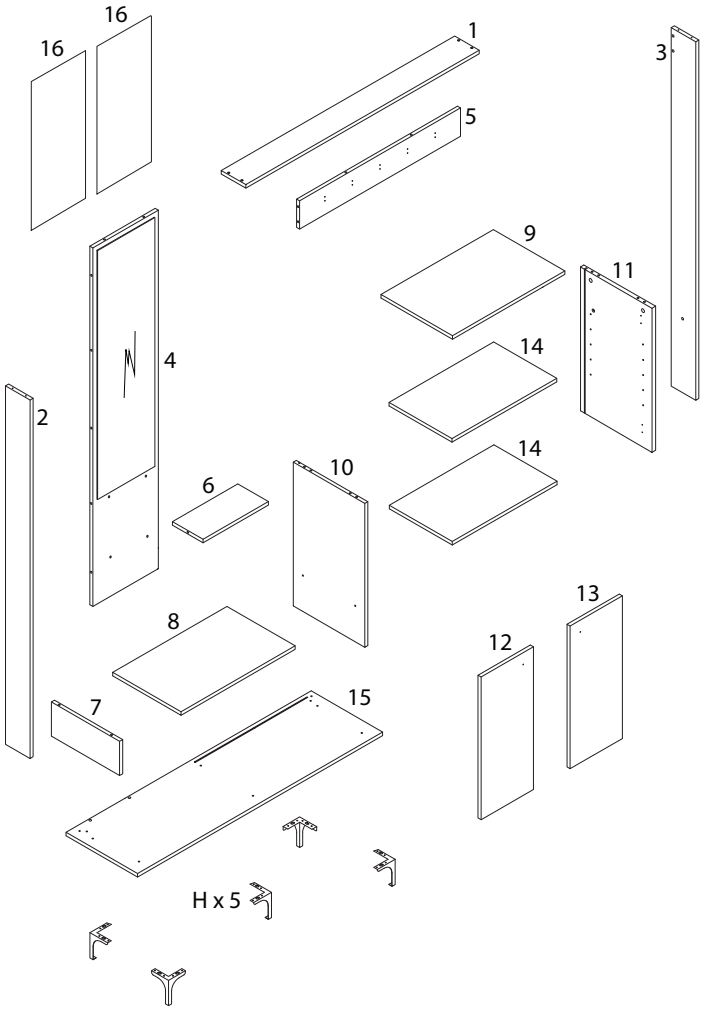

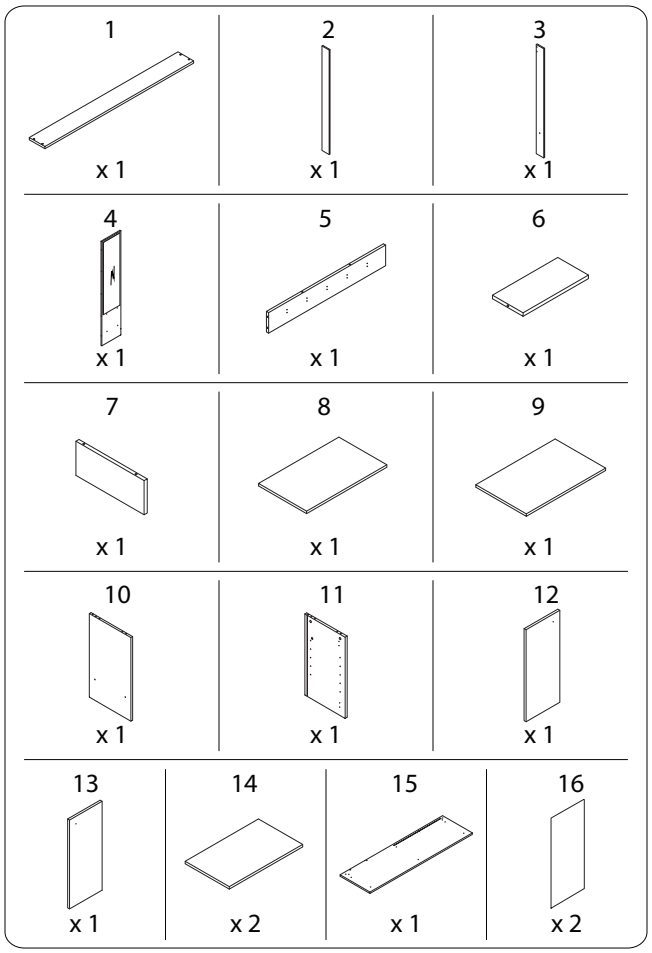

2754/BROOME/080726/

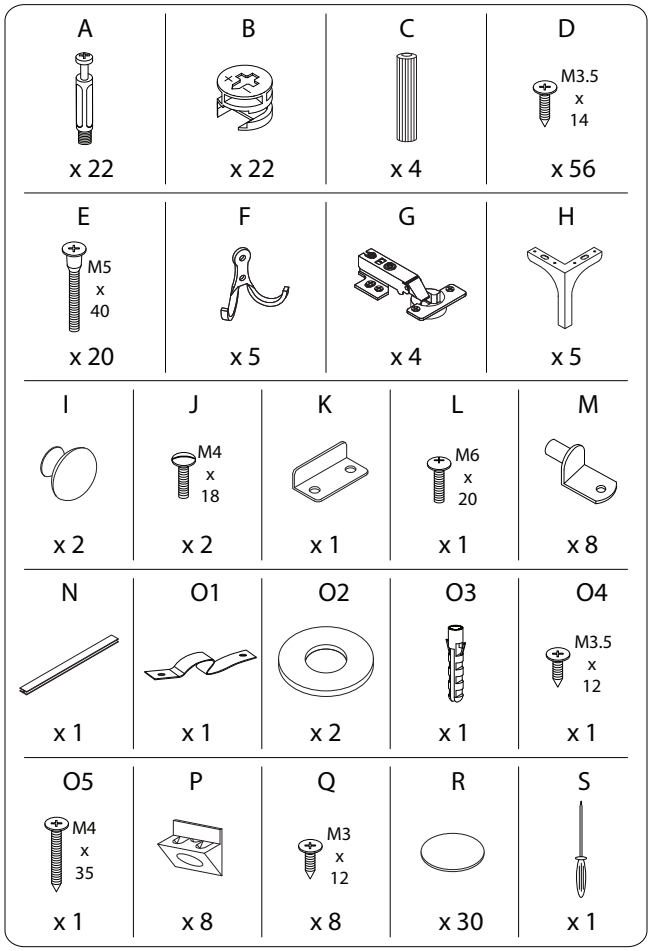
A
x 22
B
x 22
C
x 4
D
M3.5 x 14
x 56
E
M5 x 40
x 20
F
x 5
G
x 4
H
x 5
I
x 2
J
M4 x 18
x 2
K
x 1
L
M6 x 20
x 1
M
x 8
N
x 1
O1
x 1
O2
x 2
O3
x 1
O4
M3.5 x 12
x 1
O5
M4 x 35
x 1
P
x 8
Q
M3 x 12
x 8
R
x 30
S
x 1

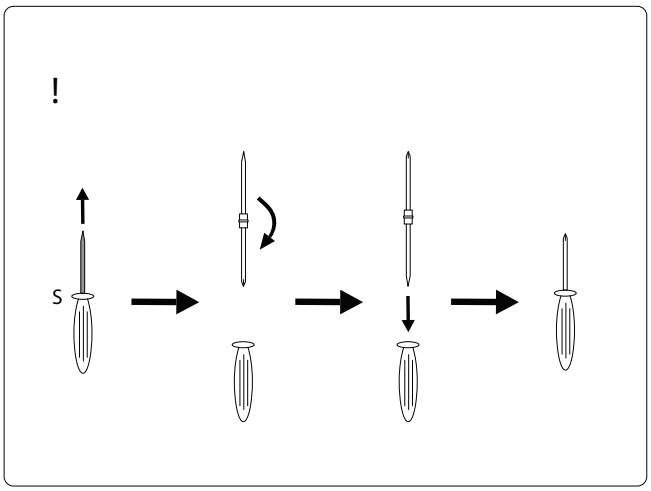
!
S

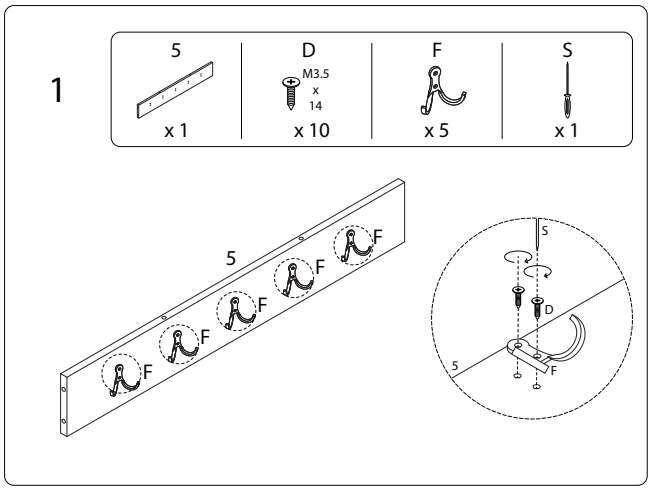
1
5
x 1
D
M3.5 x 14
x 10
F
x 5
S
x 1
5
F
S
D
5
F

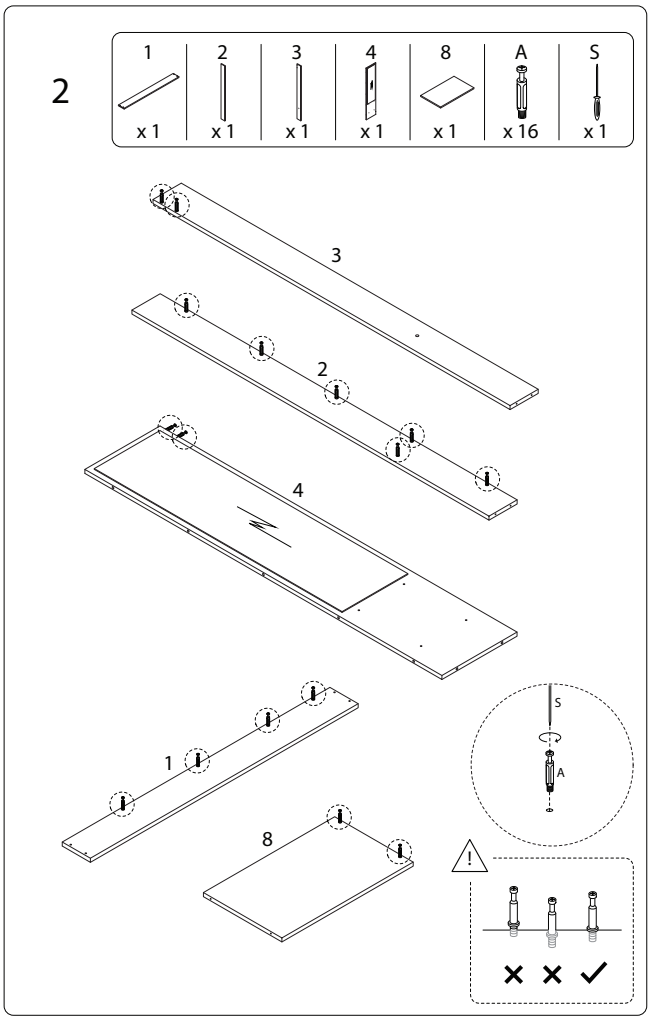
2
1
x 1
2
x 1
3
x 1
4
x 1
8
x 1
A
x 16
S
x 1
3
2
4
1
8
S
A
!

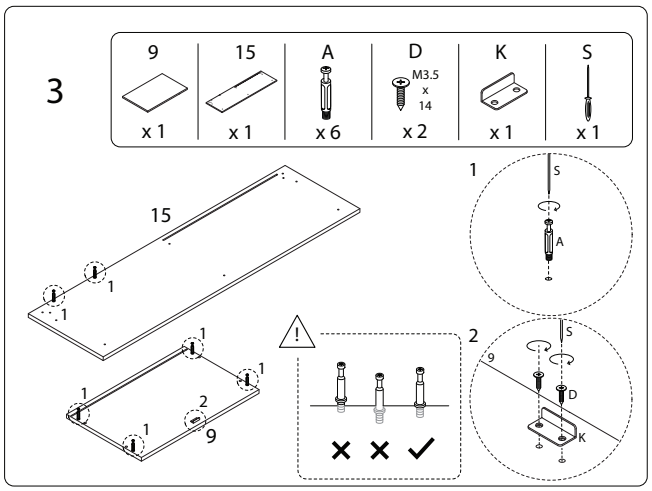
3
9
x 1
15
x 1
A
x 6
D
M3.5 x 14
x 2
K
x 1
S
x 1
15
1
2
9
!
S
A
D
K

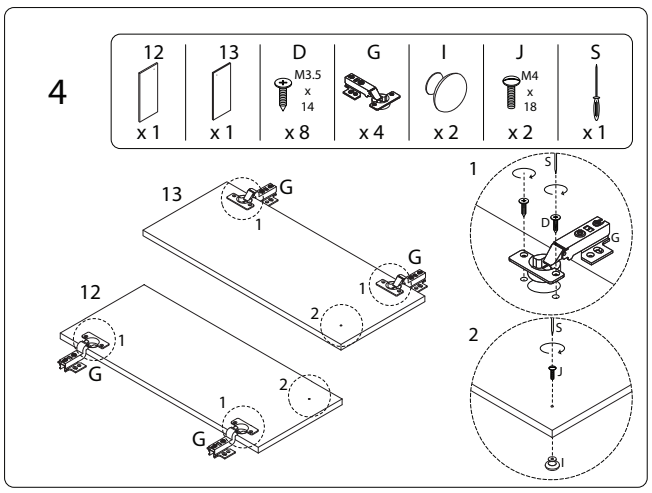
4
12
x 1
13
x 1
D
M3.5 x 14
x 8
G
x 4
I
x 2
J
M4 x 18
x 2
S
x 1
13
12
G
S
D
J
I

5

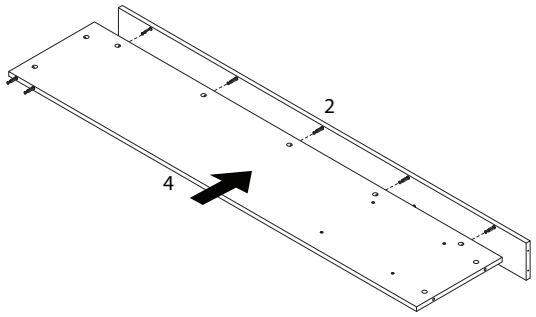

6

B	S
x 5	x 1

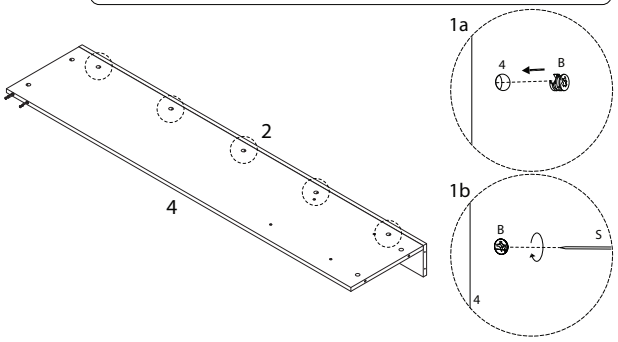

7

6	B	S
x 1	x 1	x 1

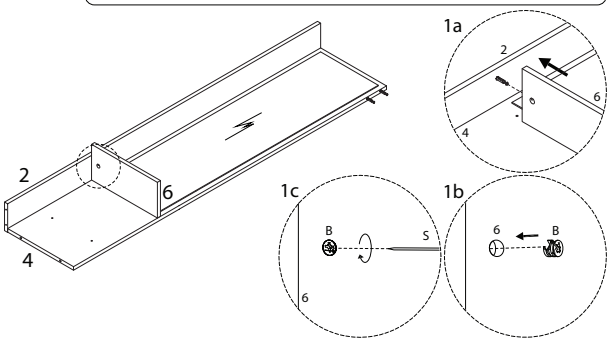

8

E	S
M5 x 40 x 2	x 1

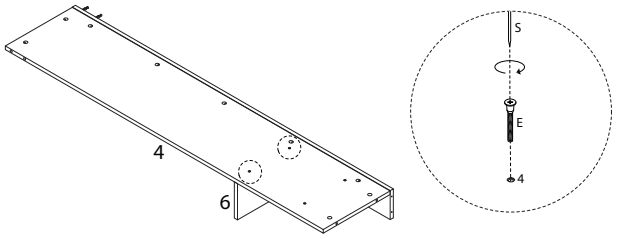

9

E	S
M5 x 40 x 2	x 1

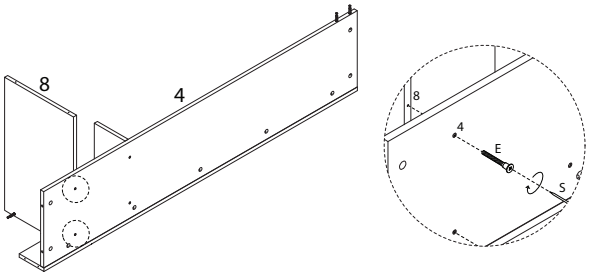

10

B	S
x 2	x 1

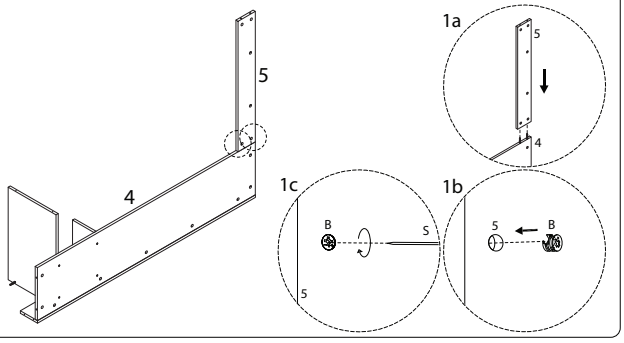

11

B	S
x 4	x 1

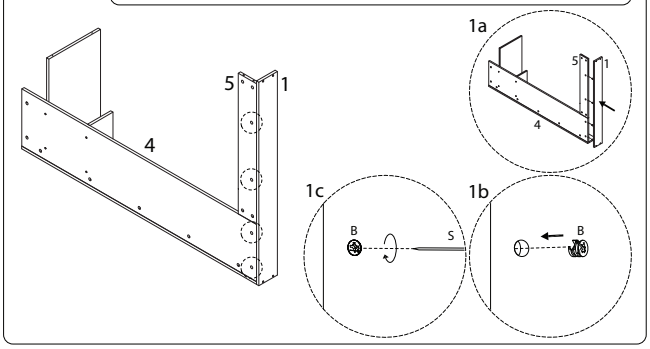

12

E	S
M5 x 40 x 2	x 1

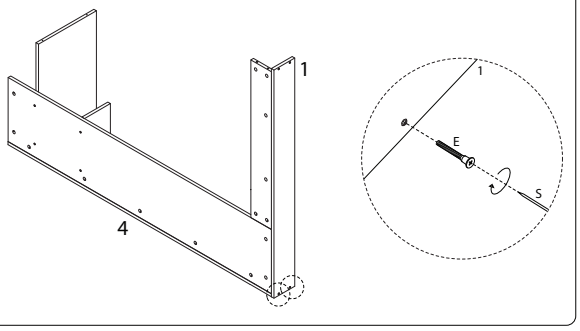

13

B	E	S
x 2	M5 x 40 x 2	x 1

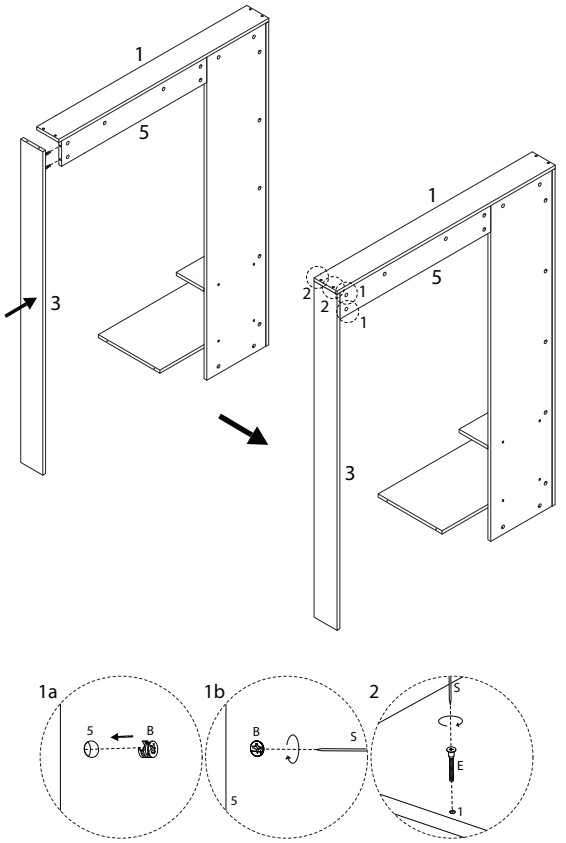

14

10	11	E	L	S
x 1	x 1	M5 x 40 x 2	M6 x 20 x 1	x 1

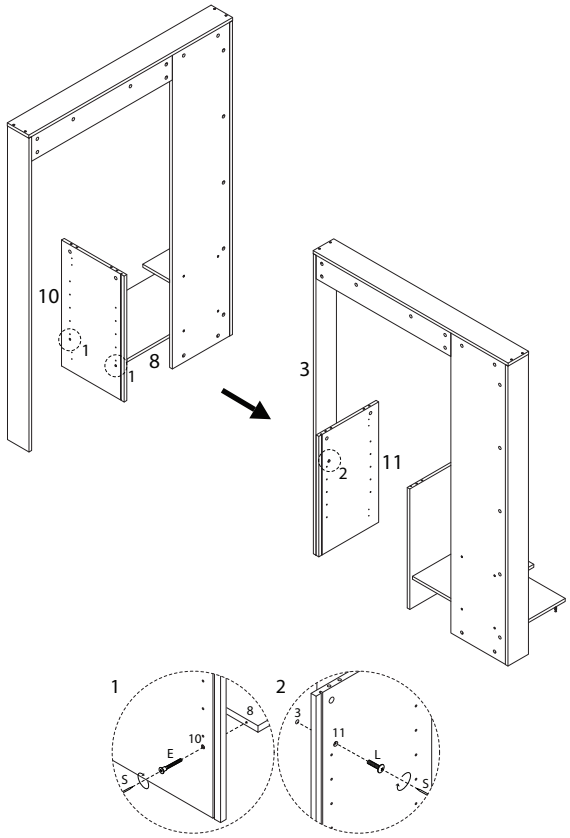

15

B	C	S
x 4	x 4	x 1

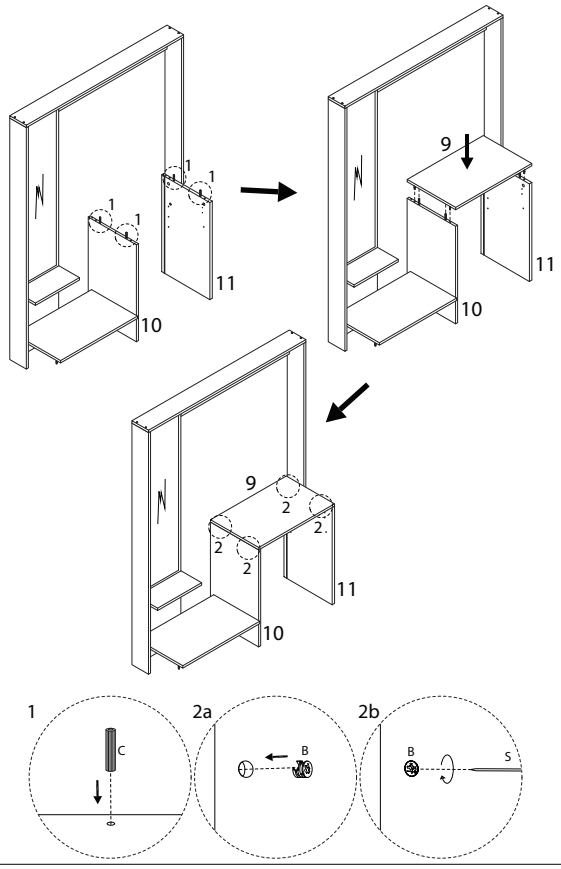

16

7	16	N
x 1	x 2	x 1

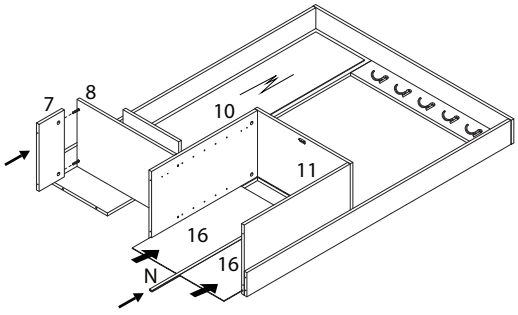

17

B	S
x 2	x 1

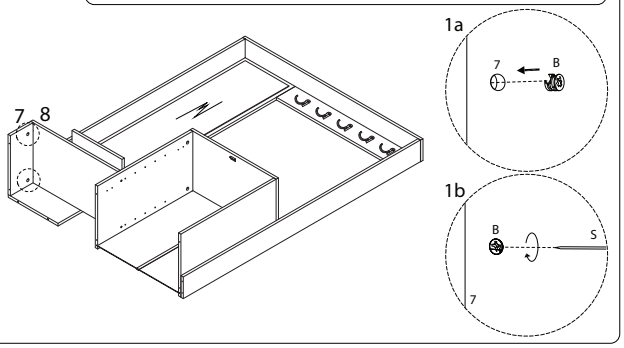

18

B	E	S
x 2	M5 x 40 x 10	x 1

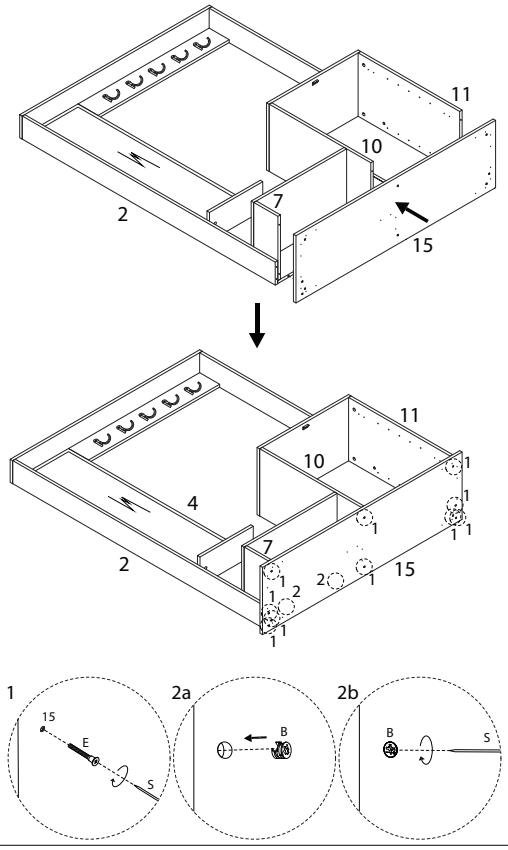

19

D	H	S
M3.5 x 14 x 20	x 5	x 1

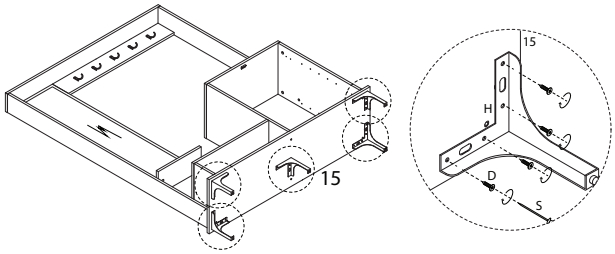

20

M
x 8

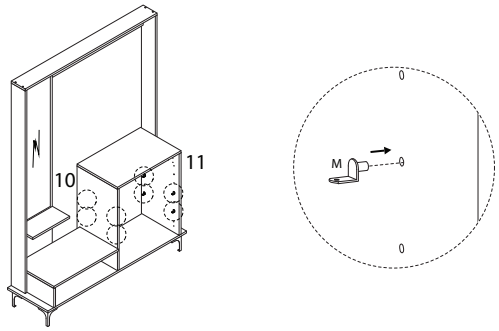

21

D	S
M3.5 x 14 x 16	x 1

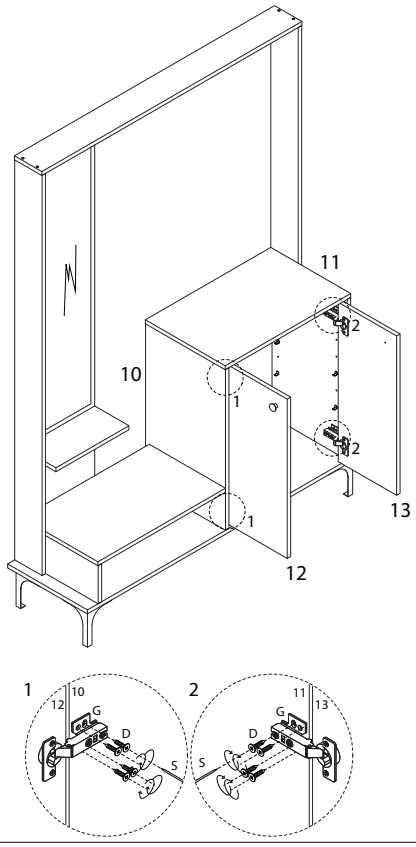

22

R
x 30

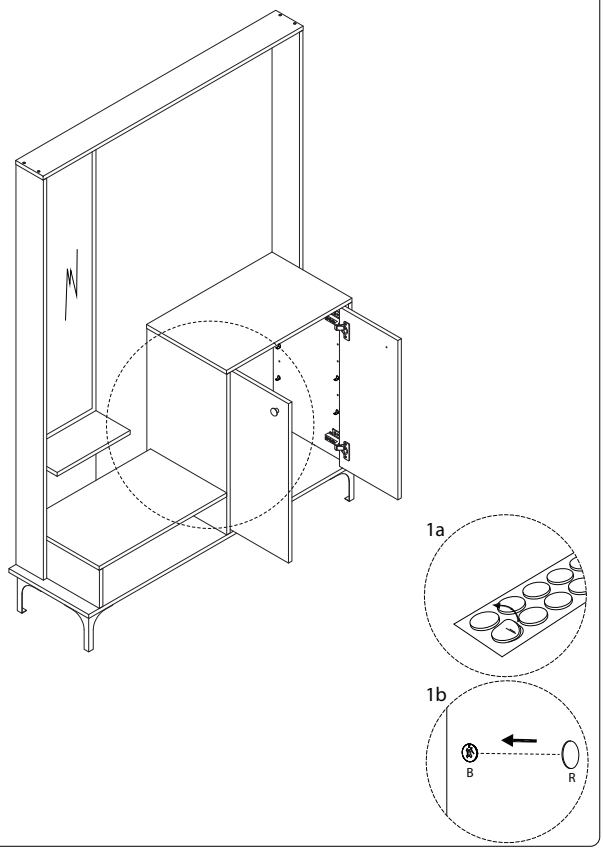

23

14
x 2

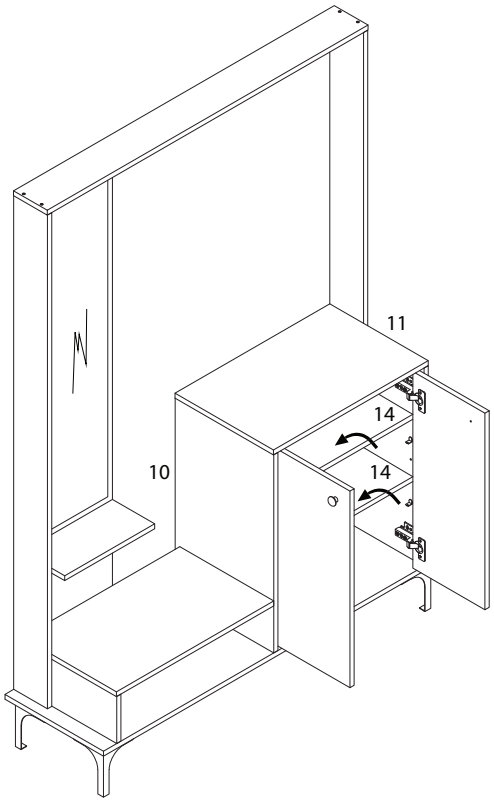

24

P	Q	S
x 8	M3 x 12 x 8	x 1

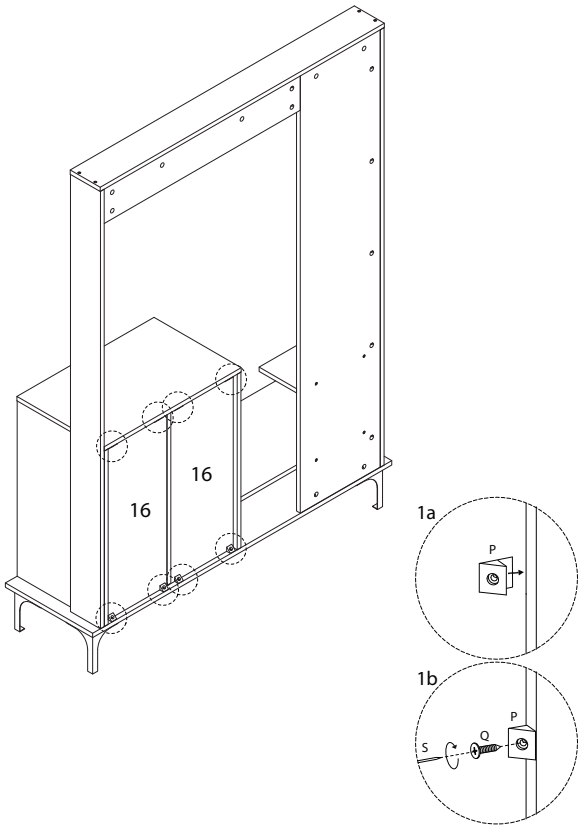

25

O1	O2	O3	O4	O5	S
x 1	x 2	x 1	M3.5 x 12 x 1	M4 x 35 x 1	x 1

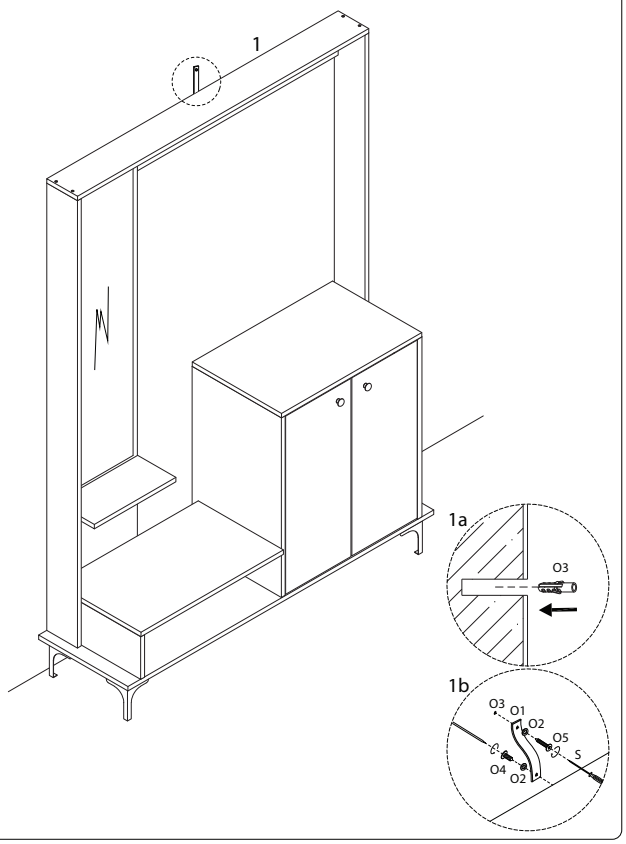
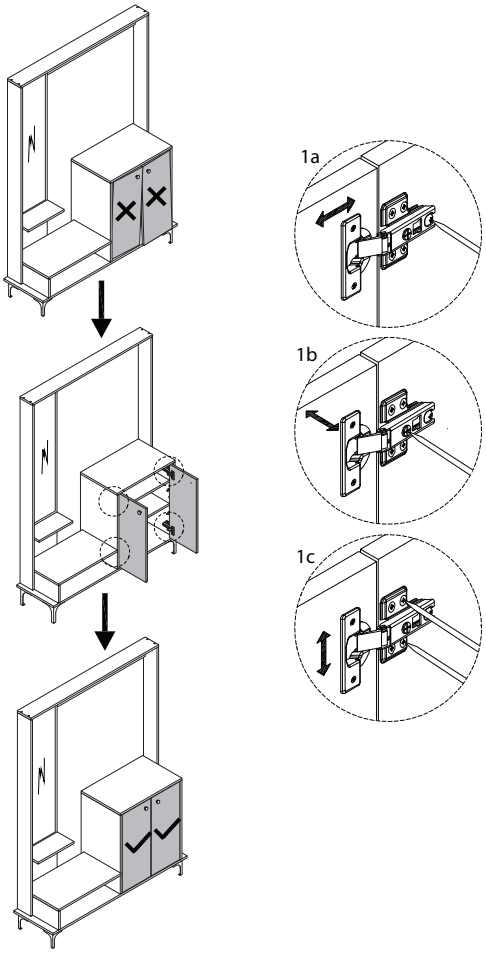
!