ARMELLE

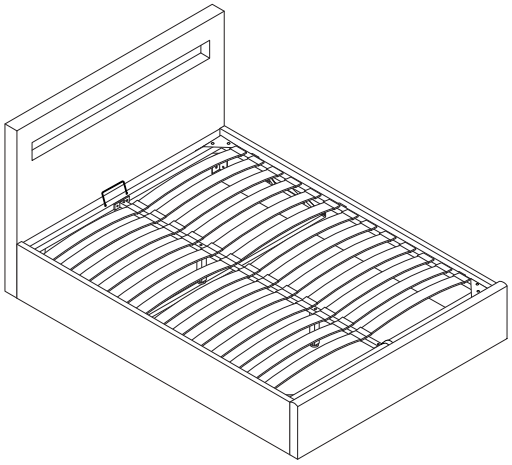

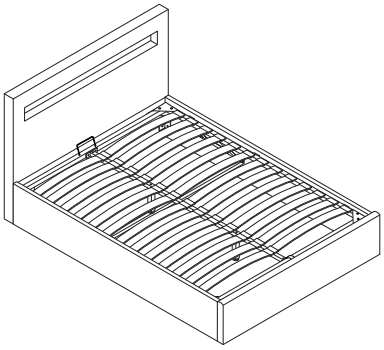

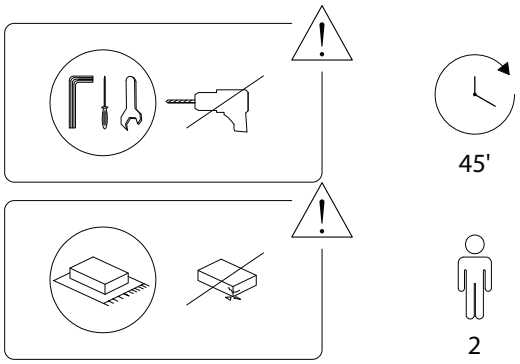

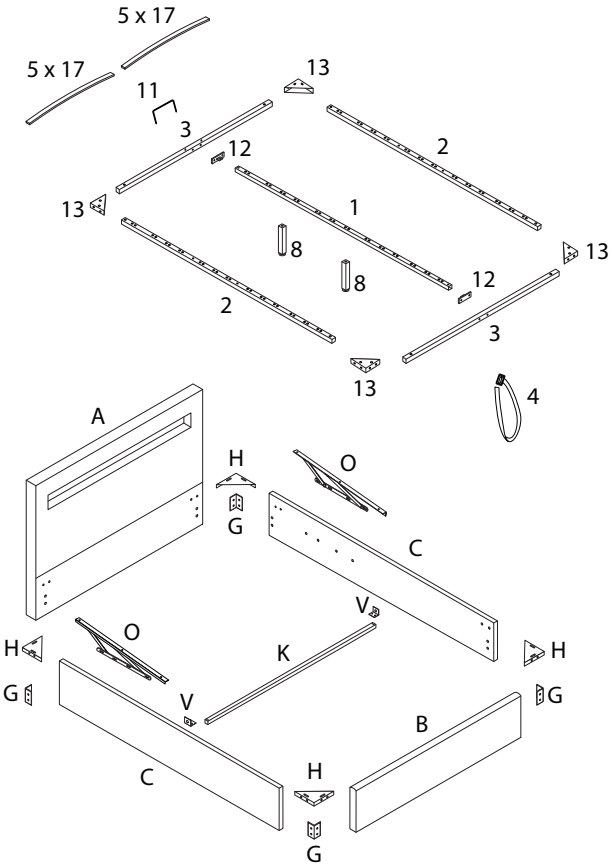

1 x 1	2 x 2	3 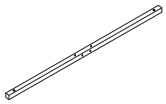 x 2
4 x 1	5 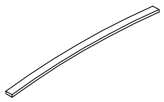 x 34	6 x 34
7 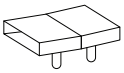 x 17	8 x 2	9 x 22
10 M8 x 40 x 24	11 x 1	12 x 2
13 x 4	14 x 4	A 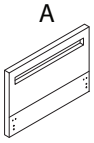 x 1

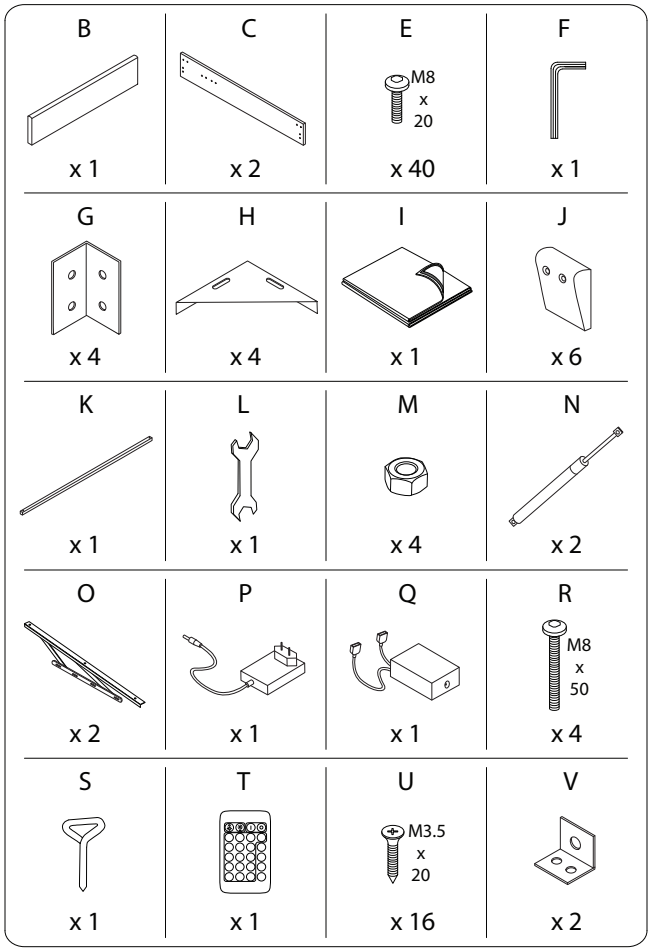
B
x 1
C
x 2
E
M8 x 20
x 40
F
x 1
G
x 4
H
x 4
I
x 1
J
x 6
K
x 1
L
x 1
M
x 4
N
x 2
O
x 2
P
x 1
Q
x 1
R
M8 x 50
x 4
S
x 1
T
x 1
U
M3.5 x 20
x 16
V
x 2

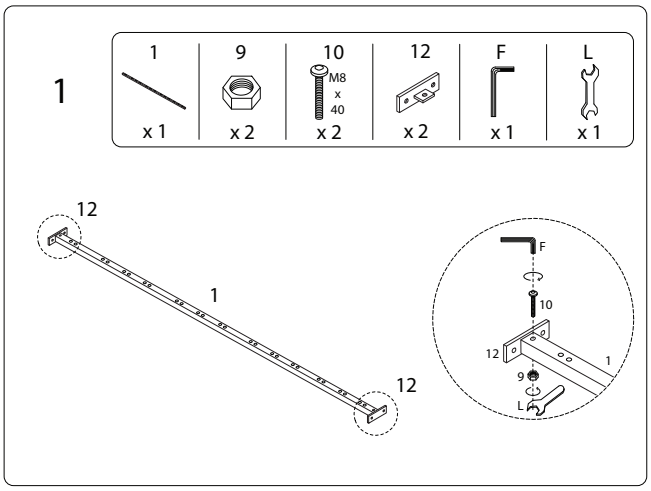
1
1 x 1
9 x 2
10 M8 x 40 x 2
12 x 2
F x 1
L x 1
12
1
12
F
10
12
1
9
L

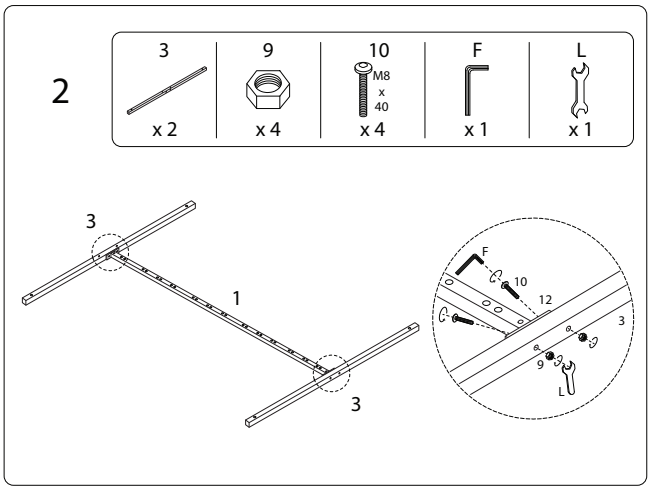
2
3 x 2
9 x 4
10 M8 x 40 x 4
F x 1
L x 1
3
1
3
F
10
12
3
9
L

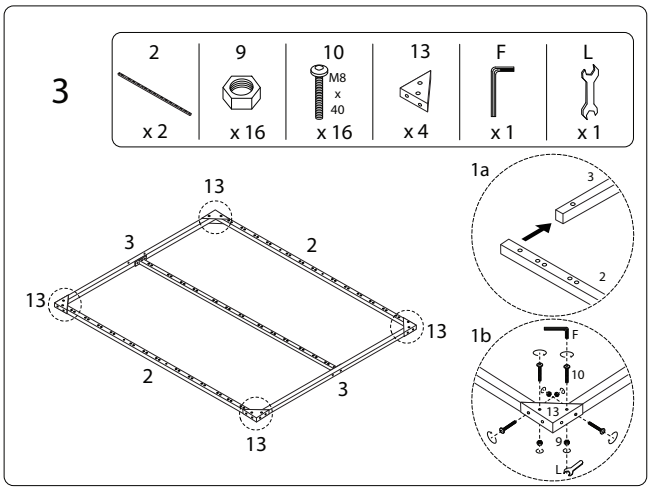
3
2 x 2
9 x 16
10 M8 x 40 x 16
13 x 4
F x 1
L x 1
13
3
2
13
13
2
3
13
1a
3
2
1b
F
10
13
9
L

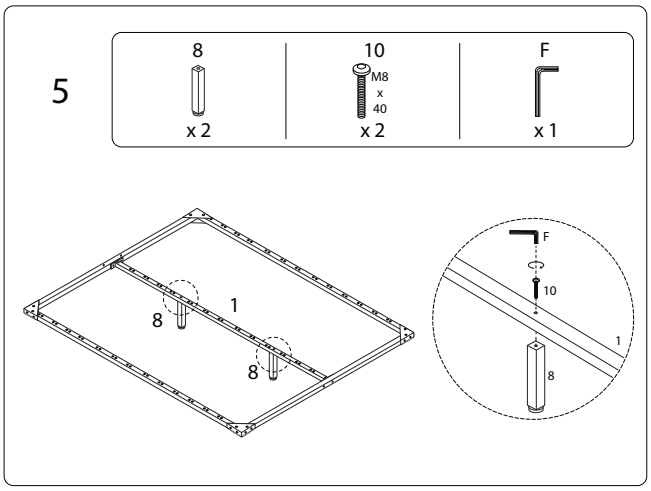
5
8 x 2
10 M8 x 40 x 2
F x 1
8
1
8
F
10
1
8

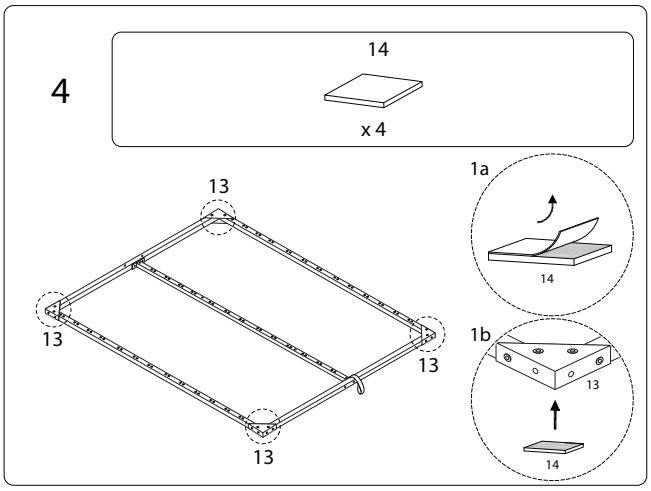
4
14 x 4
13
13
13
13
1a
14
1b
13
14

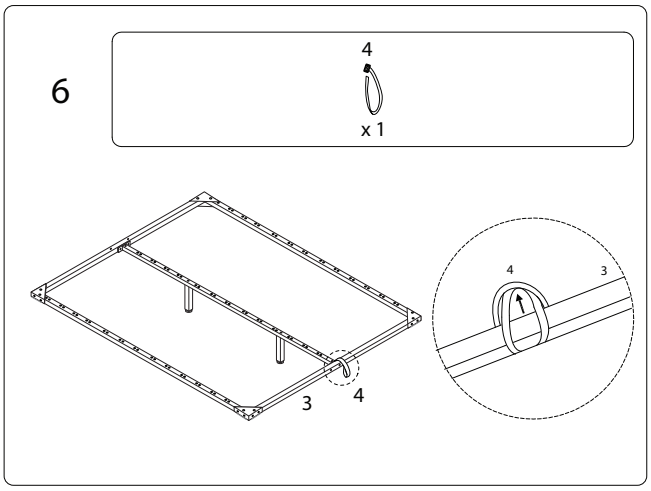
6
4 x 1
3
4
4
3

7

A	C	E	F	G	H
x 1	x 2	M8 x 20 x 10	x 1	x 2	x 2

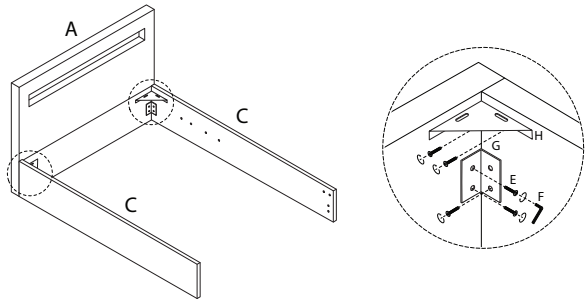

8

B	E	F	G	H
x 1	M8 x 20 x 10	x 1	x 2	x 2

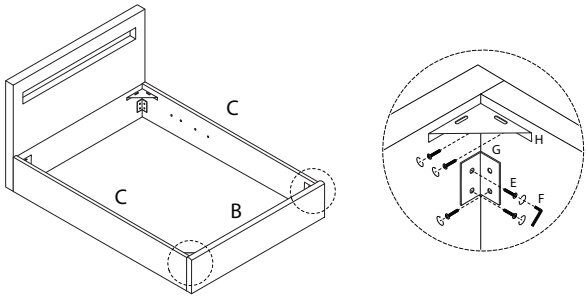

9

J	U
x 6	M3.5 x 20 x 12

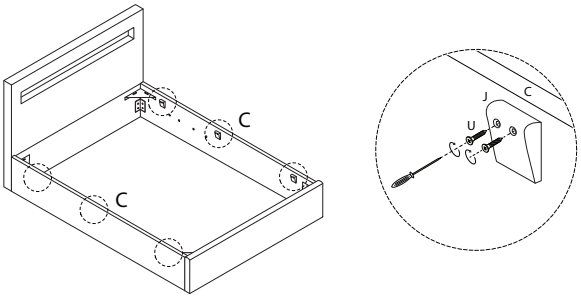

10

E	F	O	V
M8 x 20 x 8	x 1	x 2	x 2

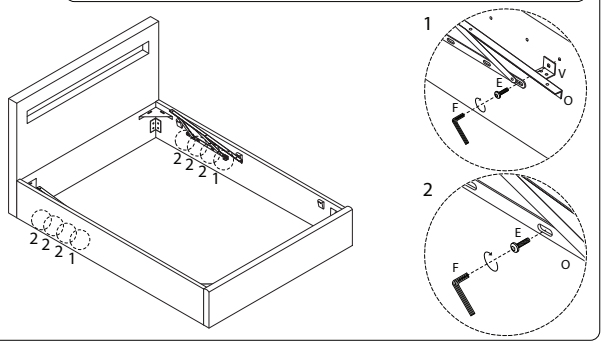

11

K	U
x 1	M3.5 x 20 x 4

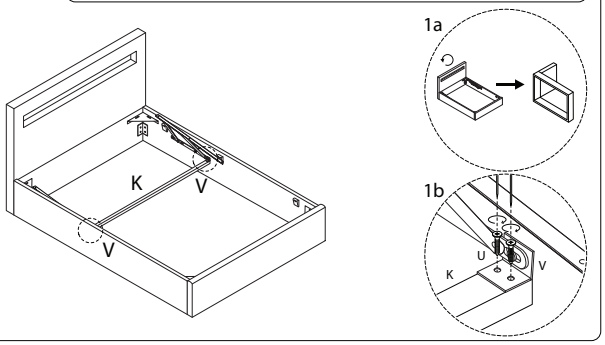

12

I
x 1

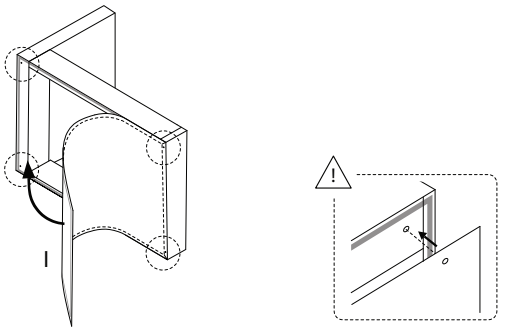

13

F	L	M	R
x 1	x 1	x 4	M8 x 50 x 4

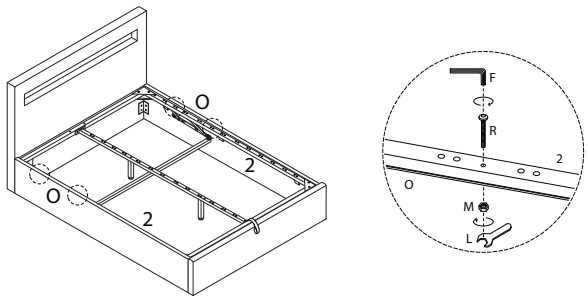

14

L	N
x 1	x 2

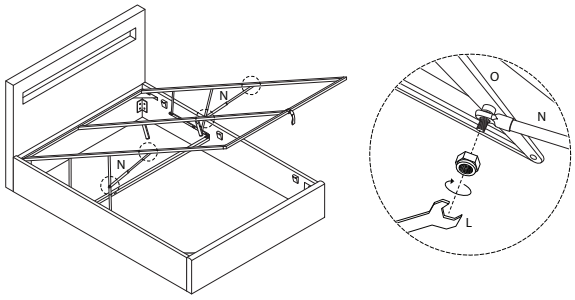

15

11

x 1

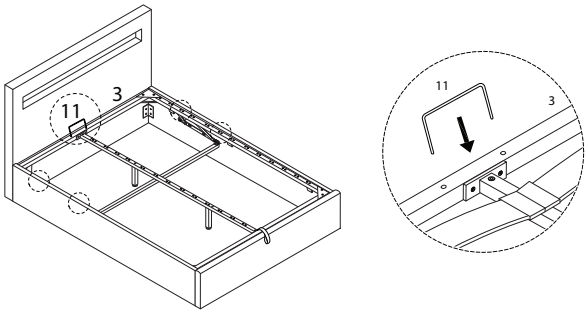

16 x 17

5	6	7
x 2	x 2	x 1

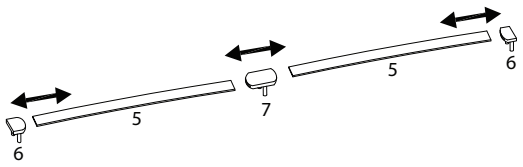

!

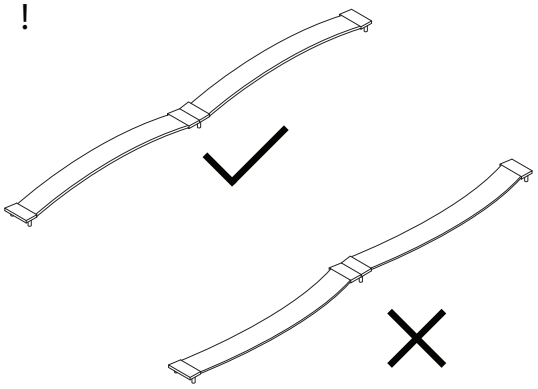

17

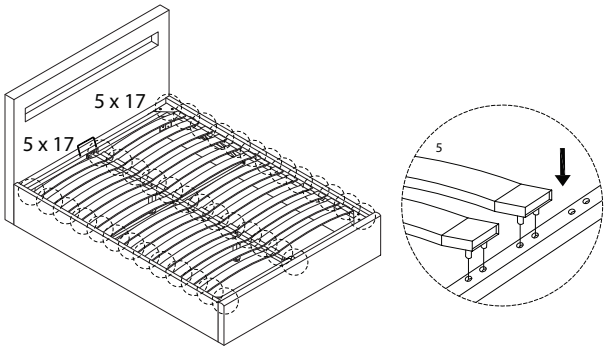

18

P	Q
x 1	x 1

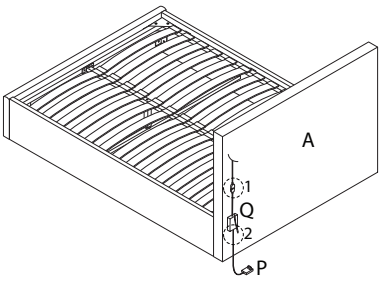

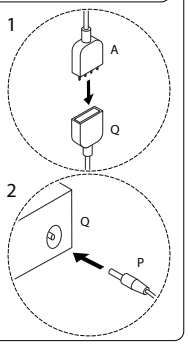

19

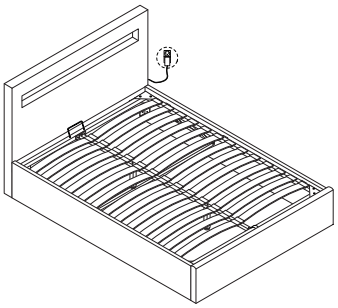

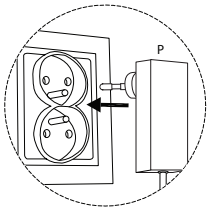

!

T
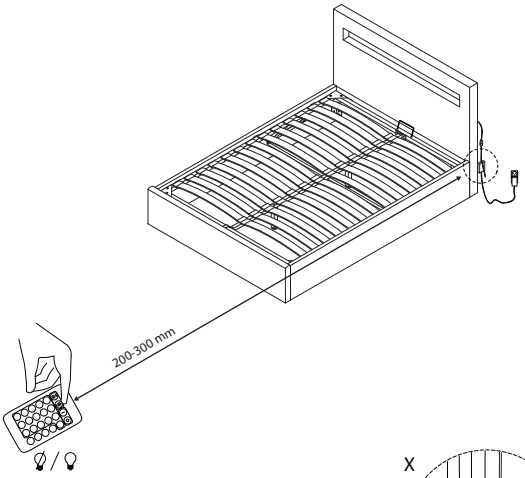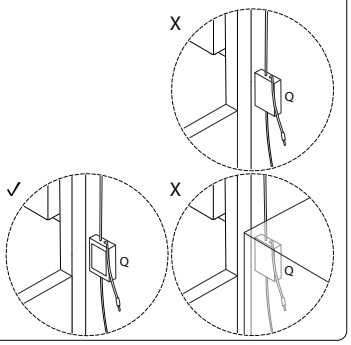
x 1