CYGNET

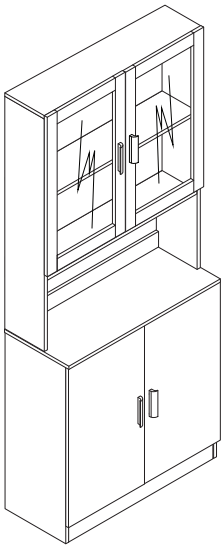

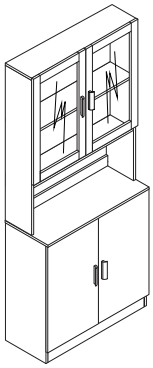

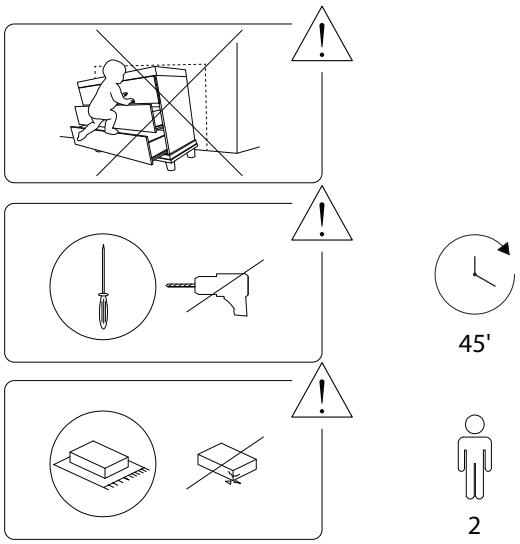
45'
2

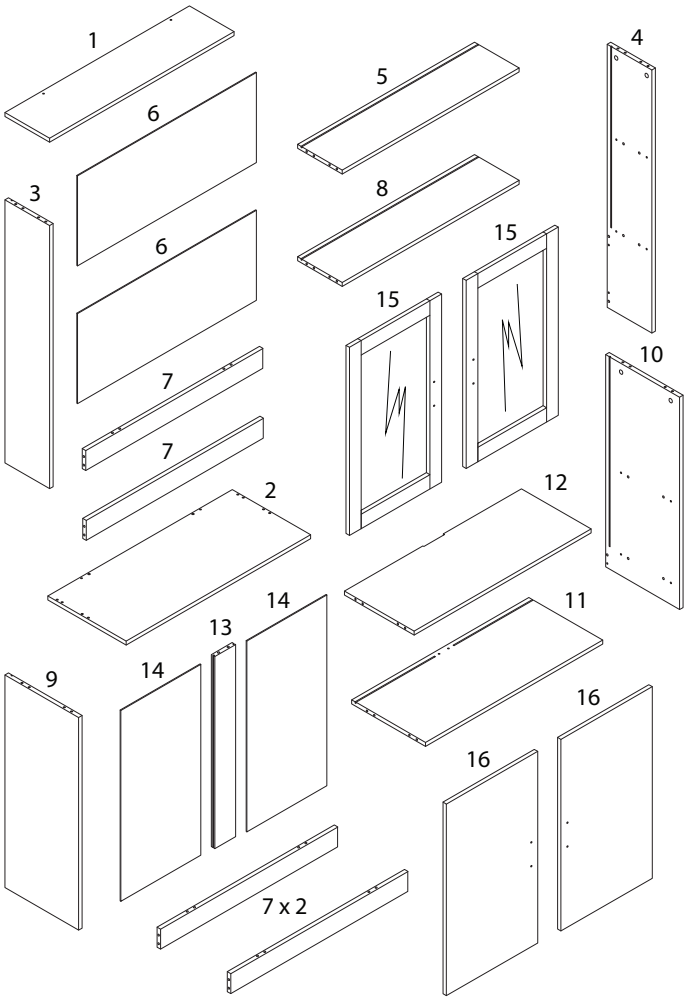
1
6
3
6
7
7
2
5
8
15
15
4
10
12
11
14
13
14
9
16
16
7 x 2

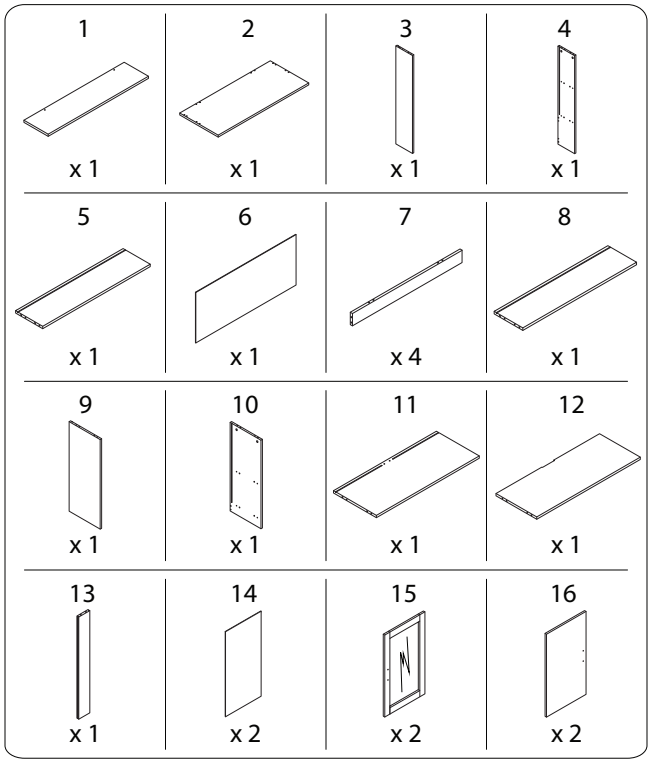
1 x 1
2 x 1
3 x 1
4 x 1
5 x 1
6 x 1
7 x 4
8 x 1
9 x 1
10 x 1
11 x 1
12 x 1
13 x 1
14 x 2
15 x 2
16 x 2

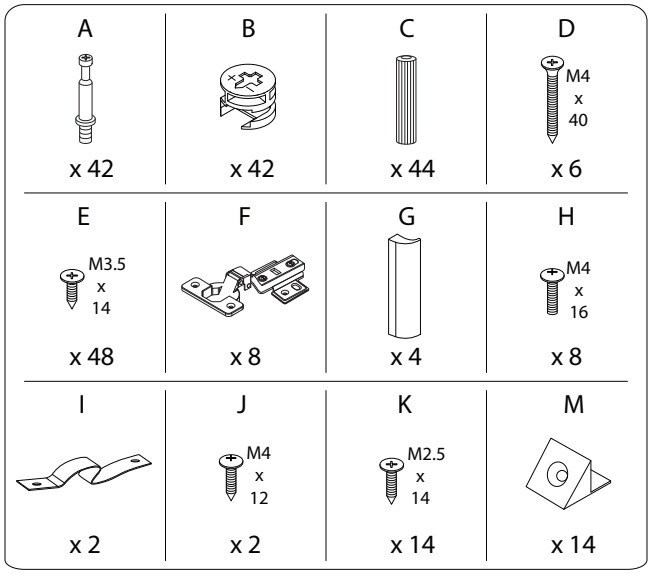
A
x 42
B
x 42
C
x 44
D
M4 x 40
x 6
E
M3.5 x 14
x 48
F
x 8
G
x 4
H
M4 x 16
x 8
I
x 2
J
M4 x 12
x 2
K
M2.5 x 14
x 14
M
x 14

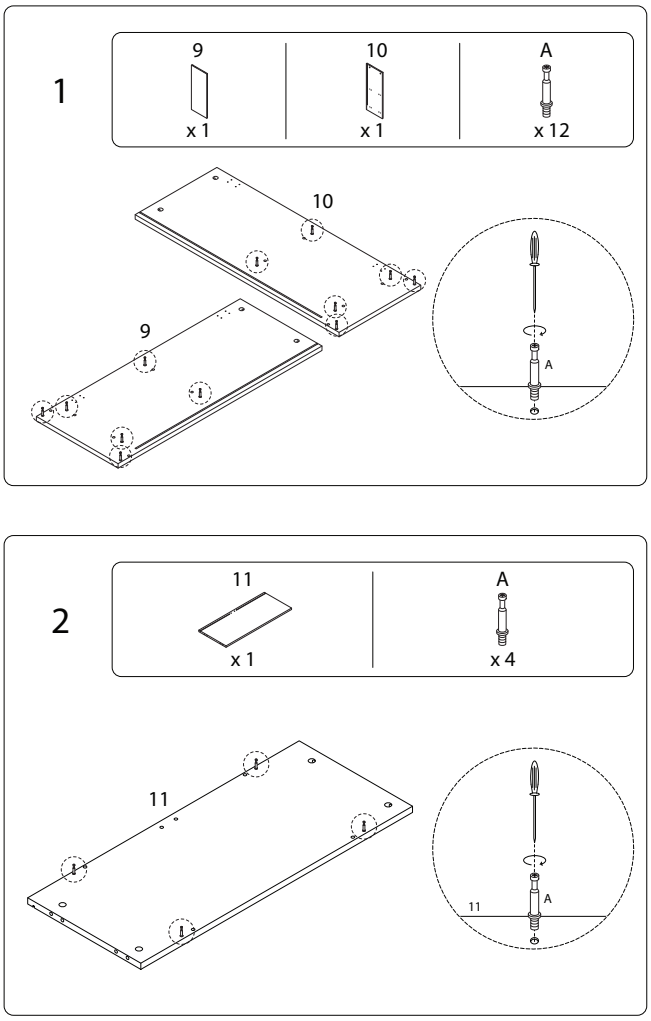
1
9
x 1
10
x 1
A
x 12
10
9
A
2
11
x 1
A
x 4
11
11
A

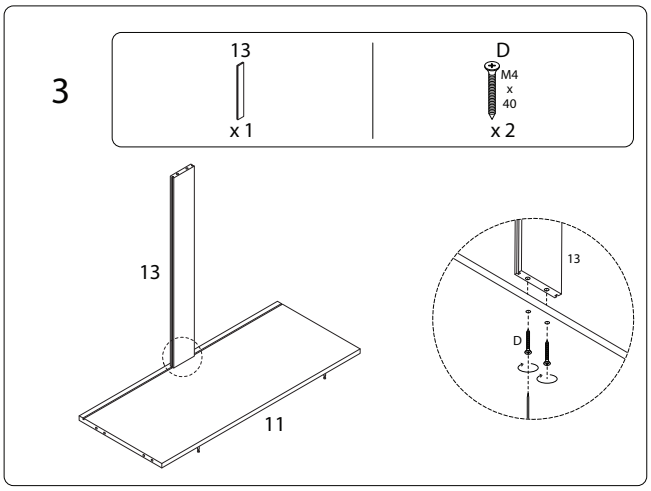
3
13
x 1
D
M4 x 40
x 2
13
11
13
D

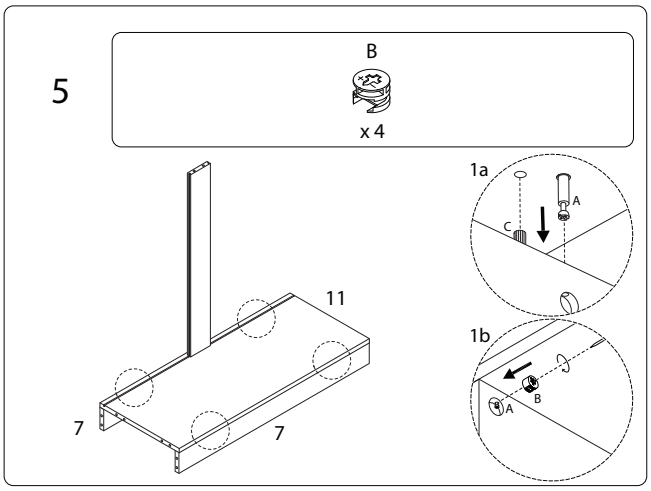
5
B
x 4
11
7
7
1a
A
C
1b
B
A

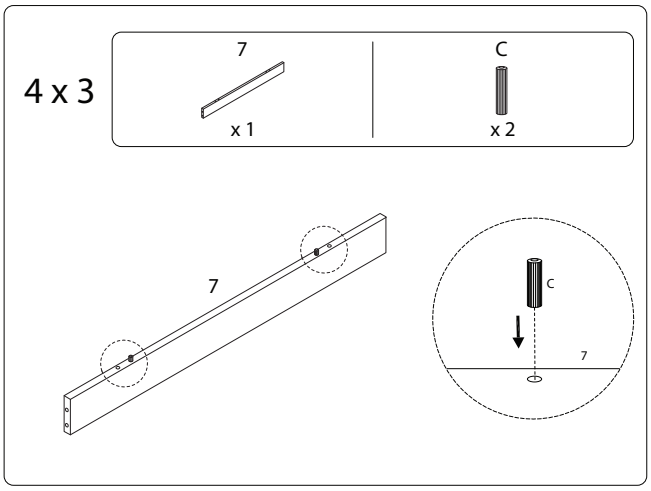
4 x 3
7
x 1
C
x 2
7
C
7

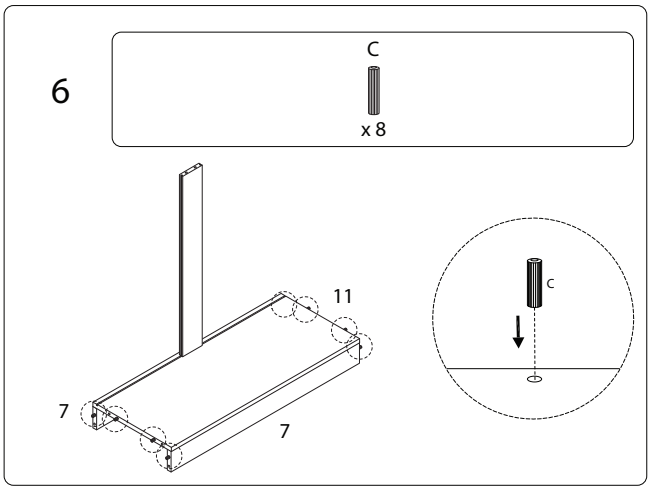
6
C
x 8
11
7
7
C

7

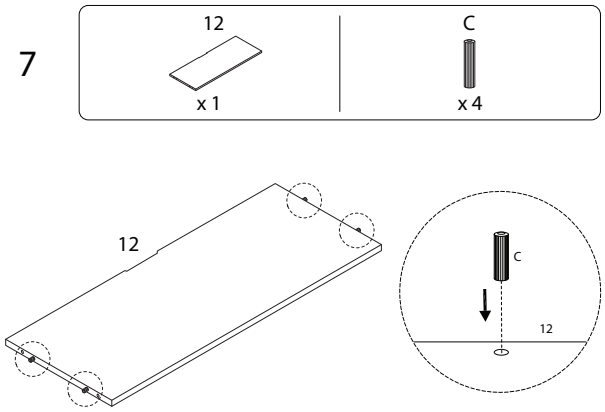

8

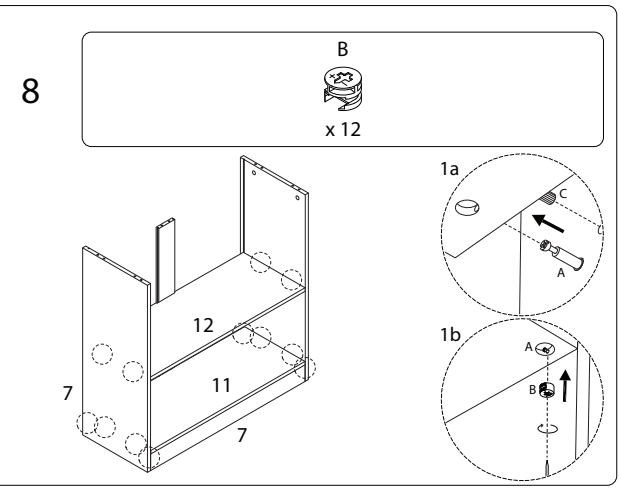

9

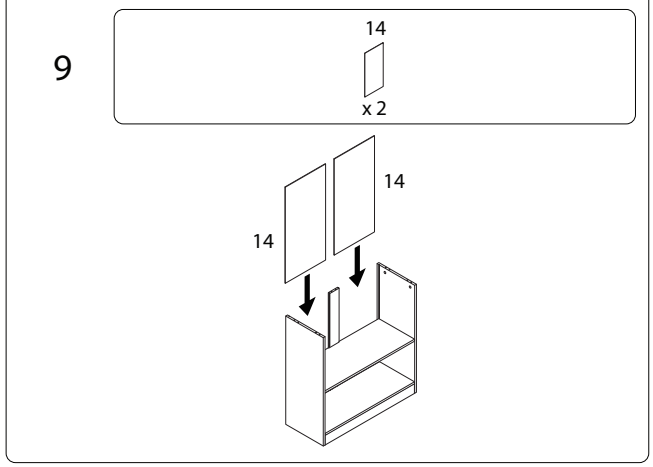

10

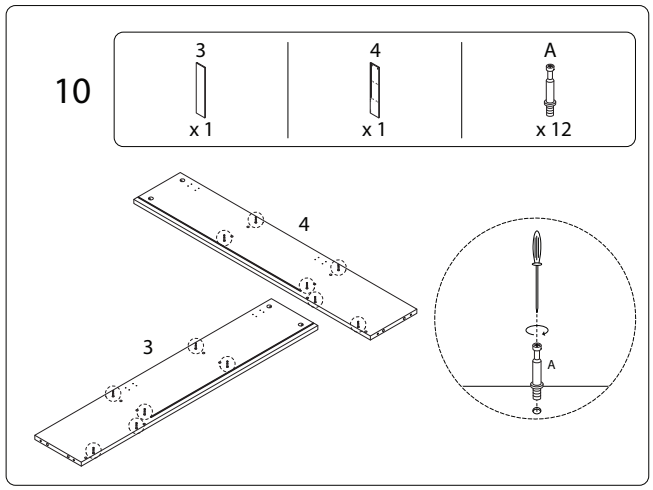

11

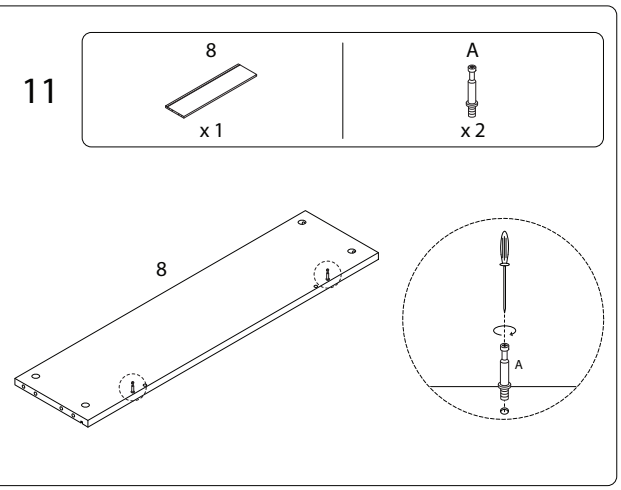

12

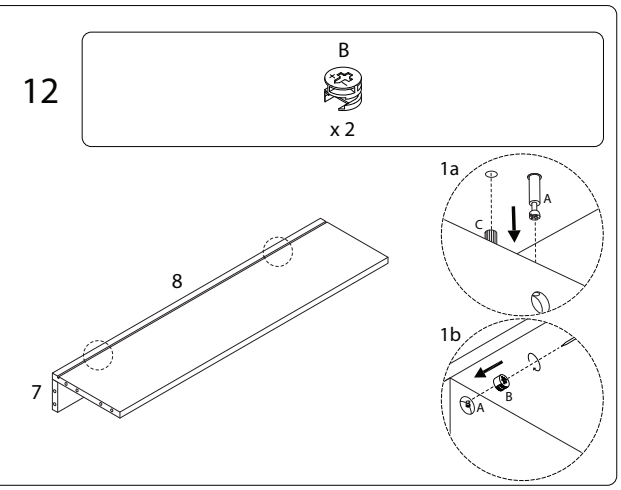

13

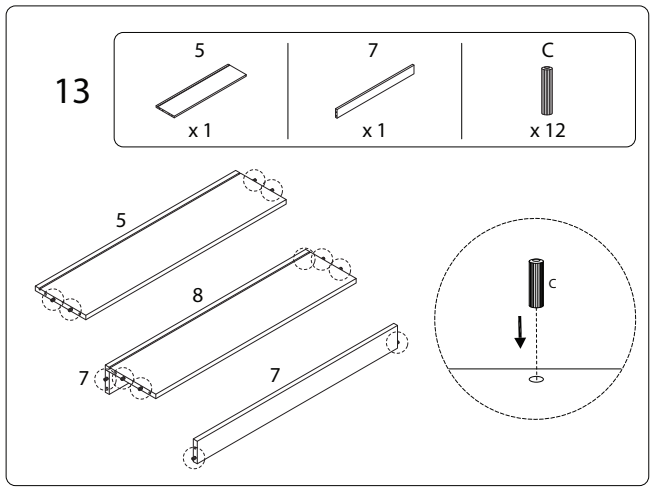

14

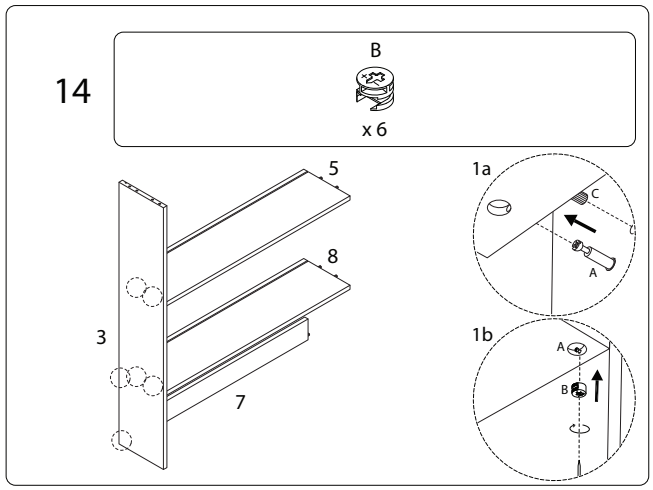

15

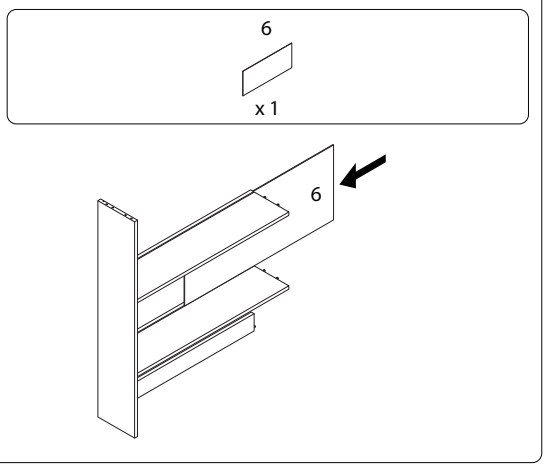

16

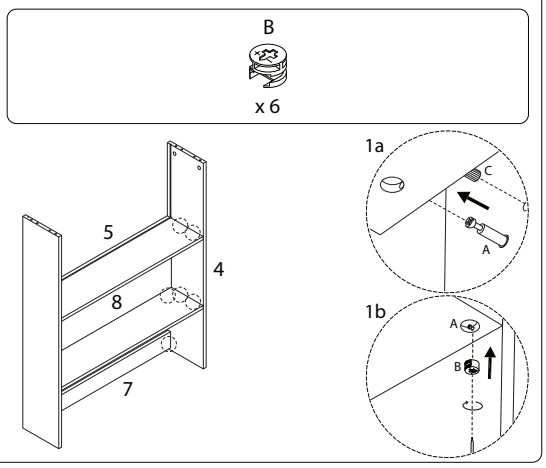

17

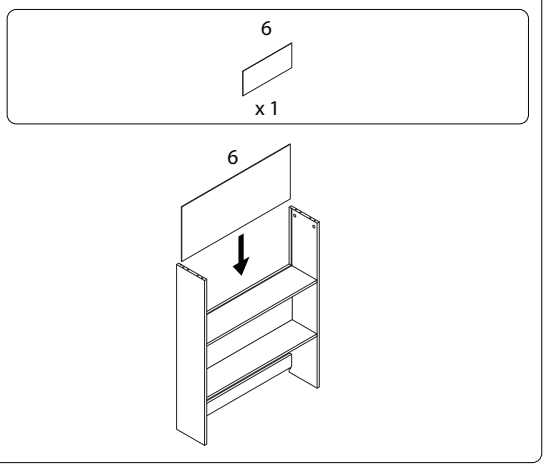

18

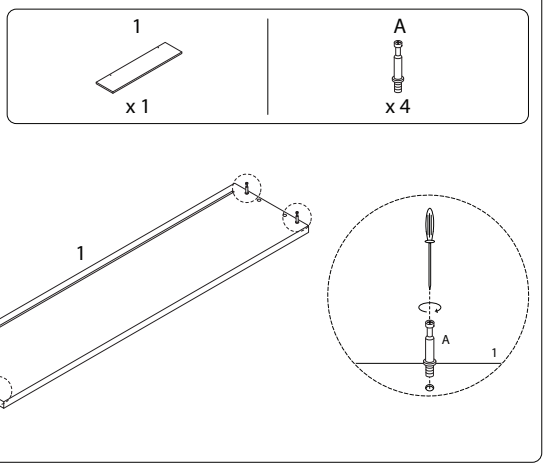

19

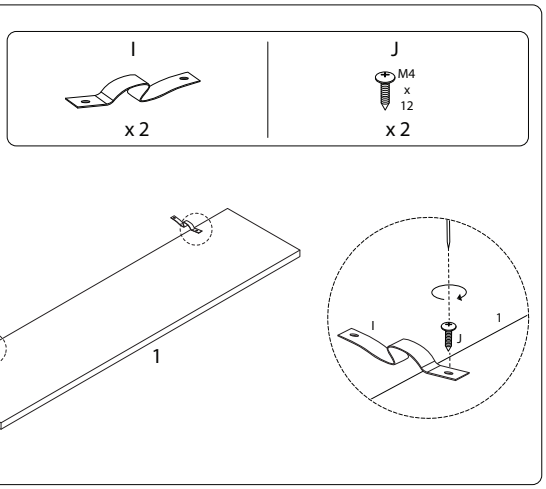

20

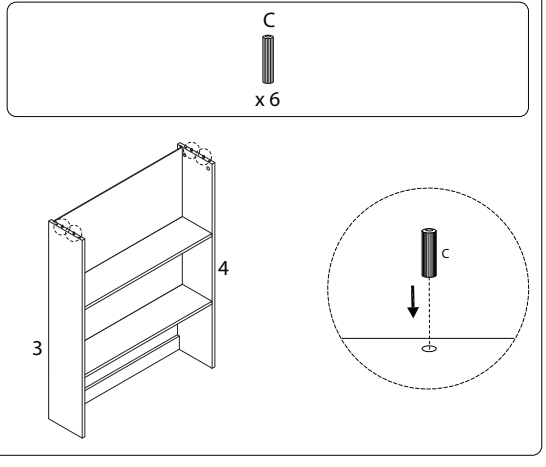

21

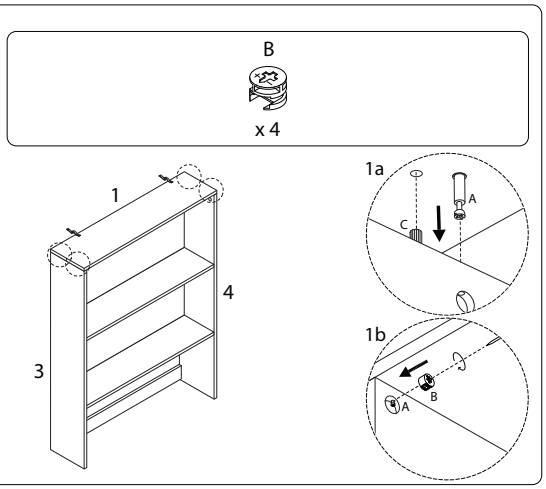

22

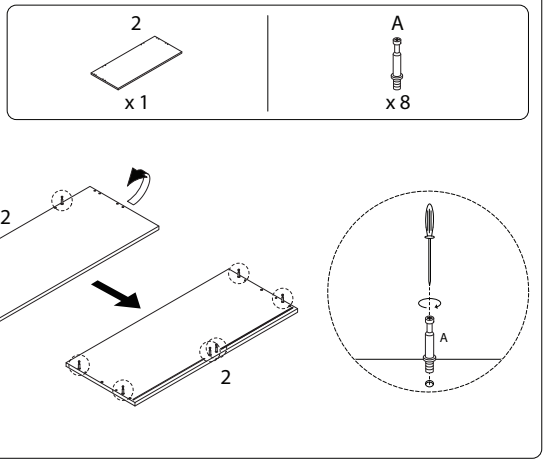

23

C
x 6

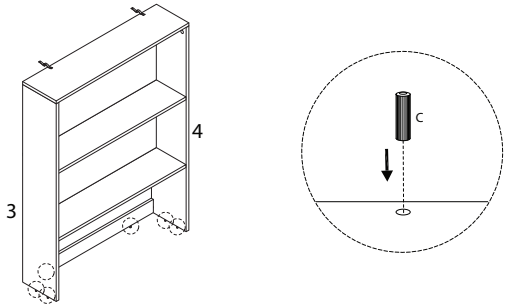

24

B
x 2

D
M4 x 40
x 4

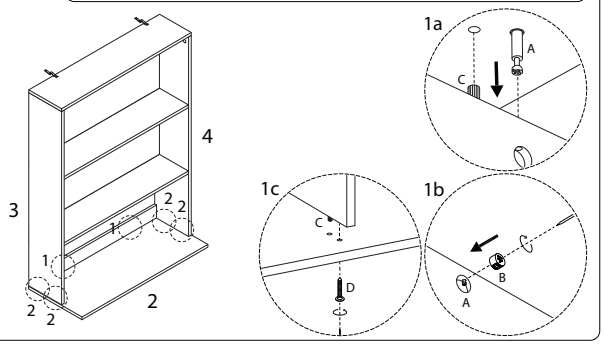

25

C
x 4

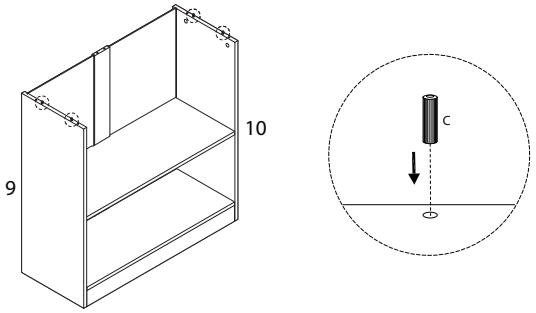

26

B
x 6

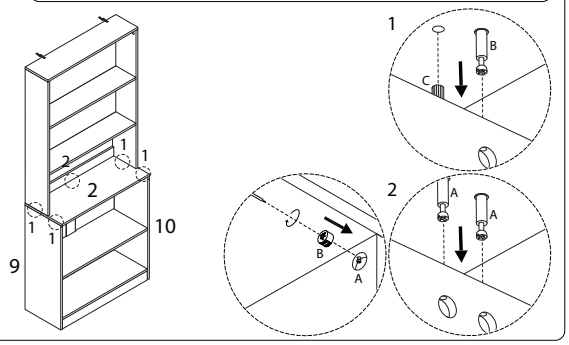

27

K
M2.5 x 14
x 14

M
x 14

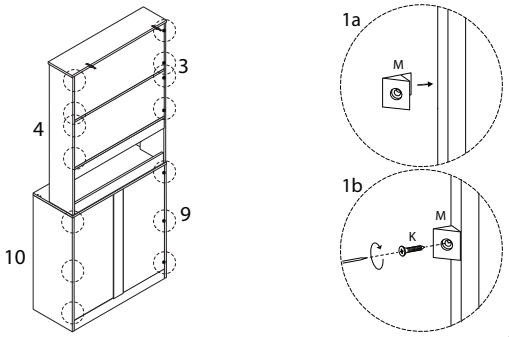

28

15
x 2

16
x 2

E
M3.5 x 14
x 16

F
x 8

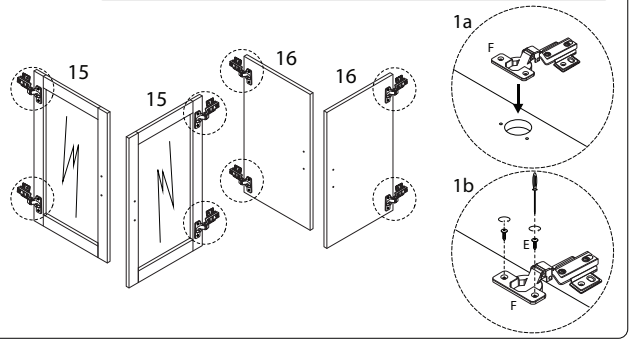

29

G
x 4

H
M4 x 16
x 8

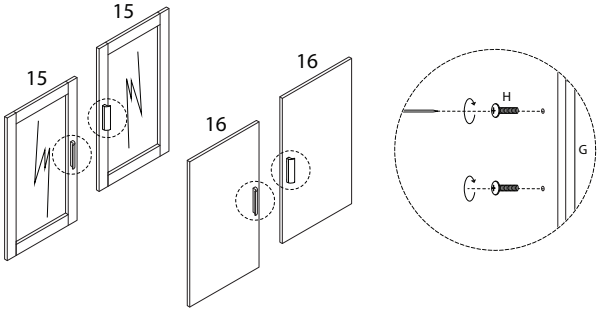

30

E
M3.5 x 14
x 32

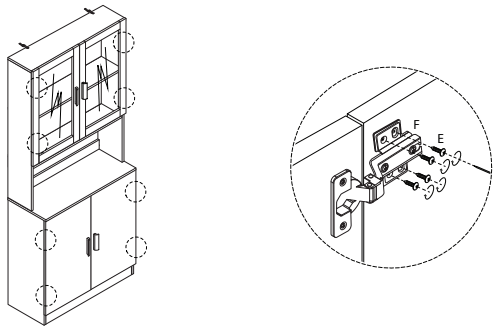

31

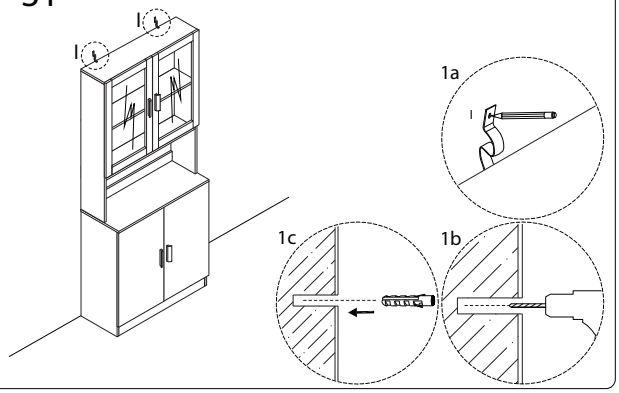

32

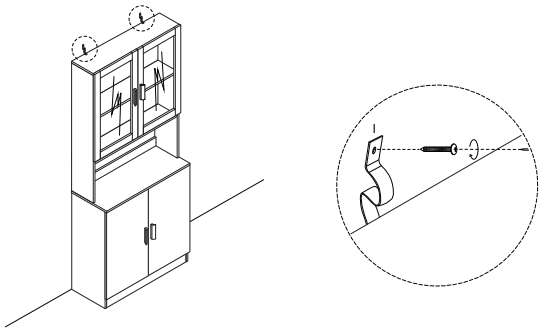

33

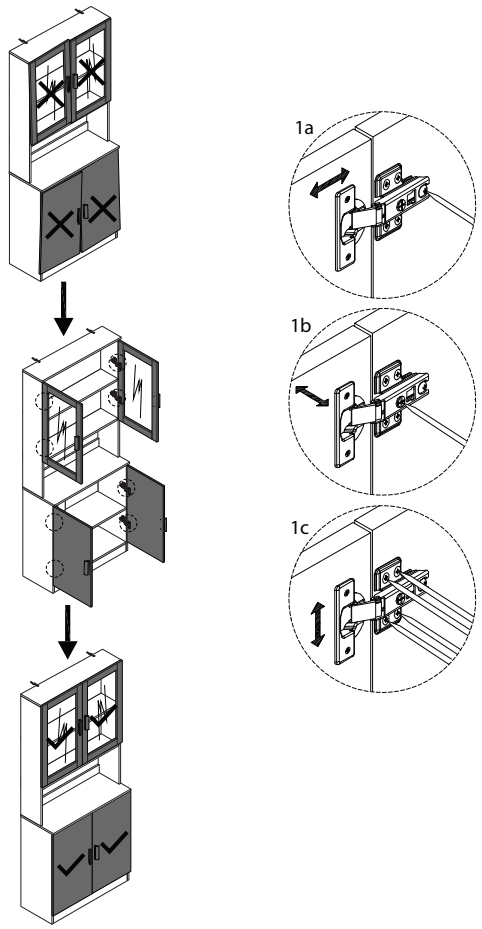

1444/CYGNET/090925/