TAMRE

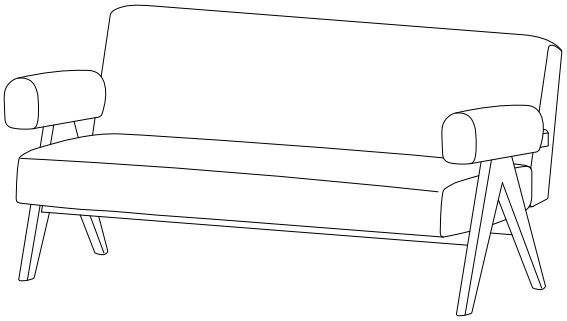

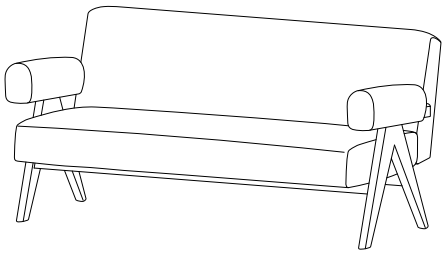

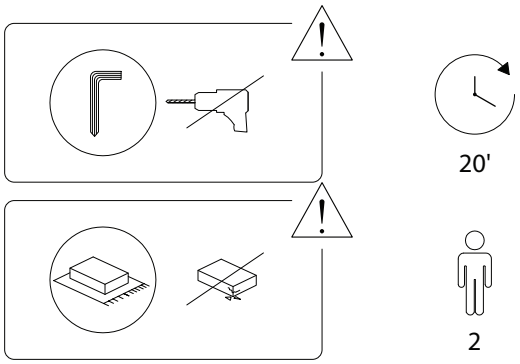

1/8

2533/TAMRE/230126/

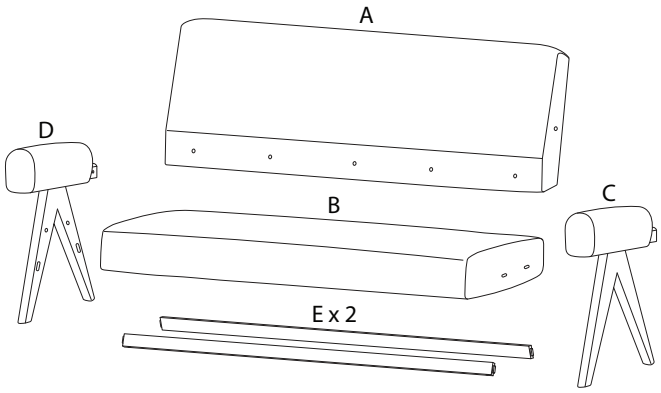

F	G	H	I
 M8 x 60	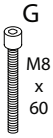 M8 x 60	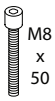 M8 x 50	
x 2	x 5	x 4	x 9

J	K	L	N
	 M4 x 45		
x 9	x 4	x 4	x 1

A	B	C	D	E
				
x 1	x 1	x 1	x 1	x 2

2533/TAMRE/230126/

2533/TAMRE/230126/

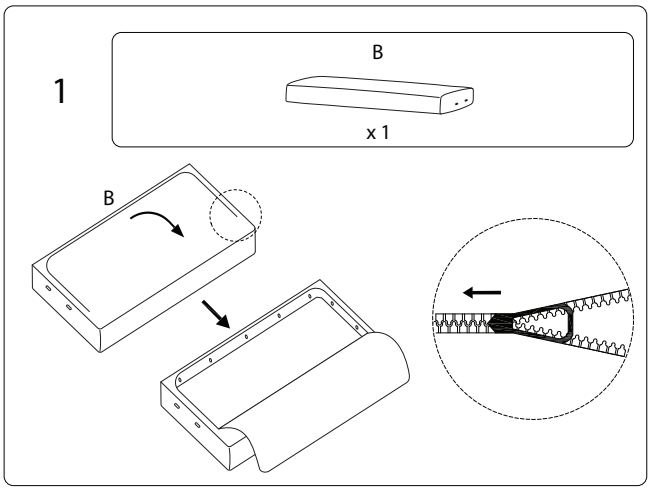
1
B
x 1
B

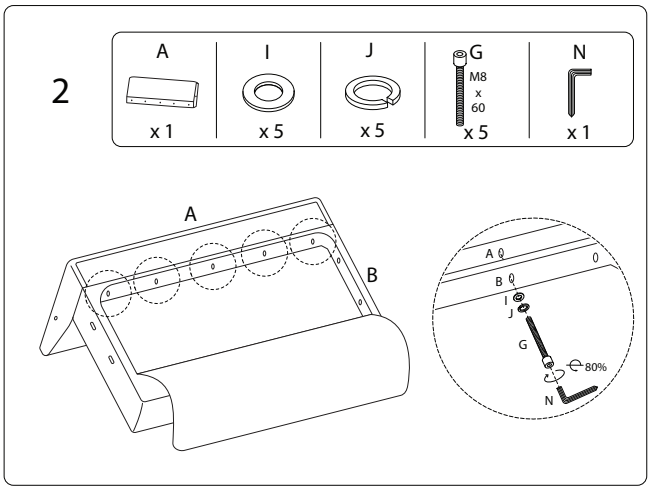
2
A
x 1
I
x 5
J
x 5
G
M8
x
60
x 5
N
x 1
A
B
80%
N

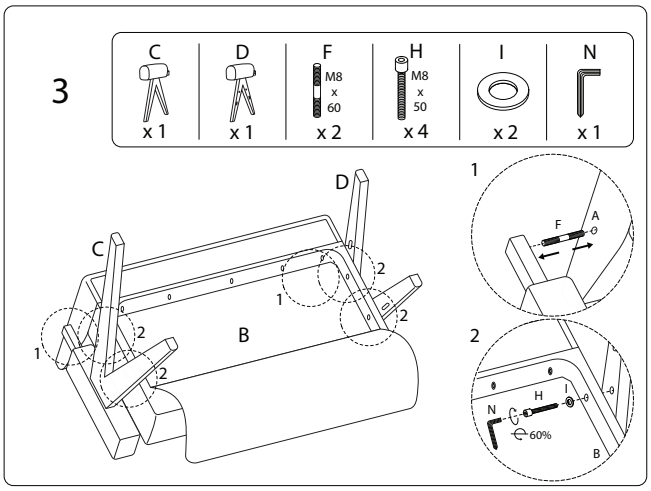
3
C
x 1
D
x 1
F
M8
x
60
x 2
H
M8
x
50
x 4
I
x 2
N
x 1
D
C
B
60%

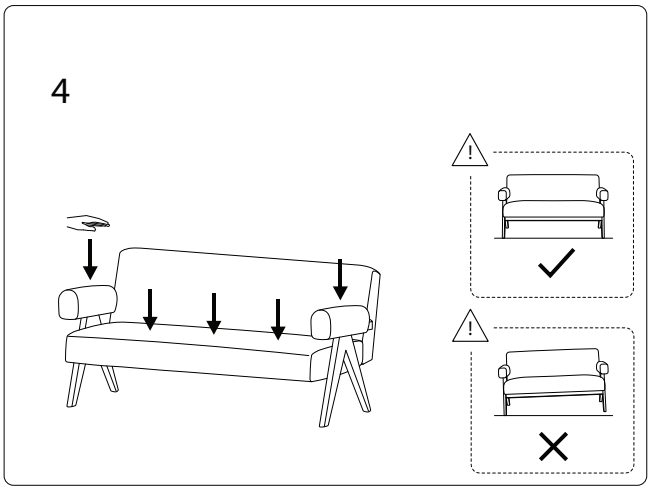
4

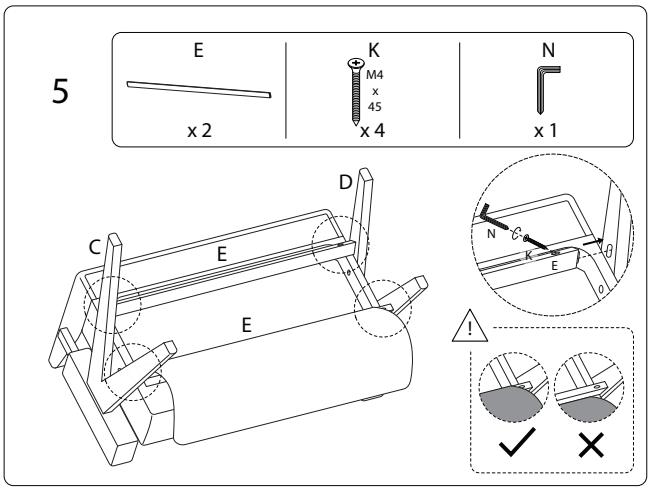
5
E
x 2
K
M4
x
45
x 4
N
x 1
D
C
E
E

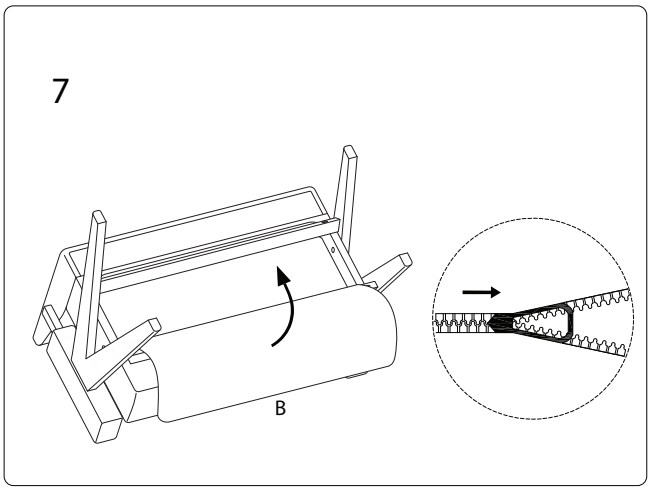
7
B

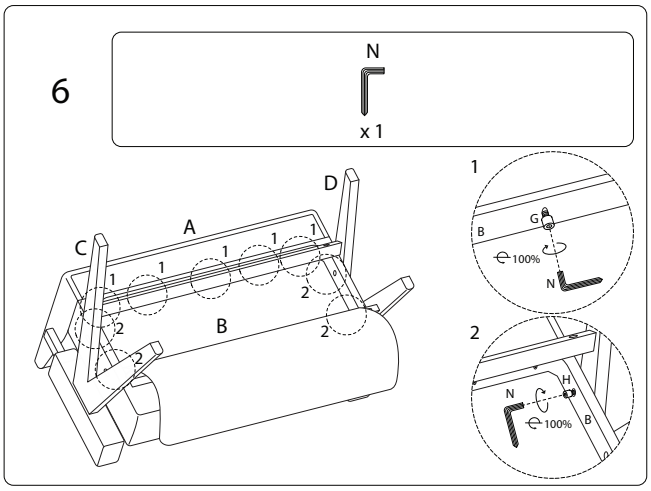
6
N
x 1
D
A
C
B
100%

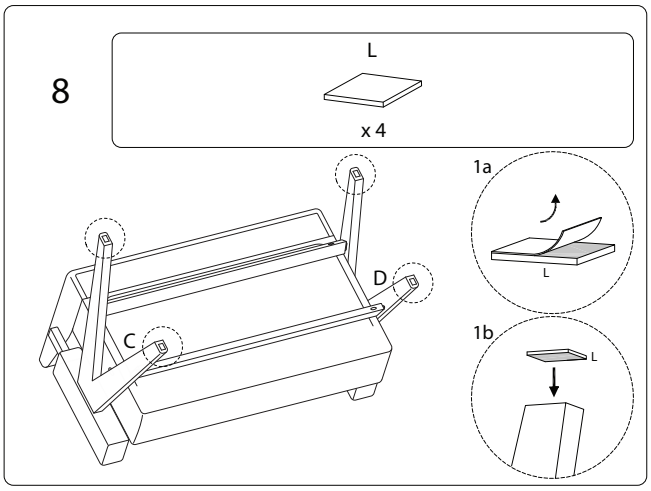
8
L
x 4
D
C
1a
1b
L

!

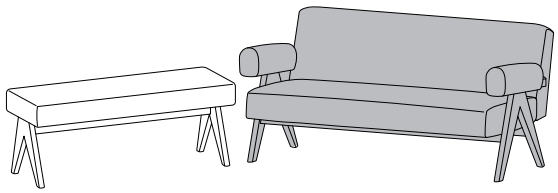

2533/TAMRE/230126/