KEITH

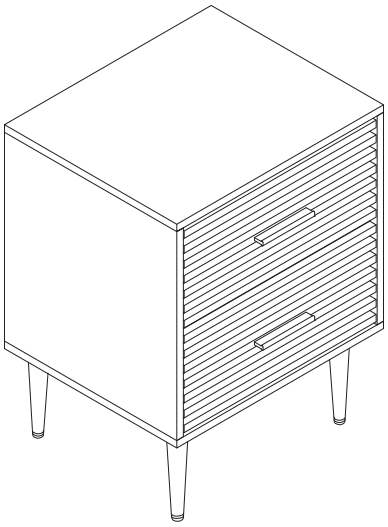

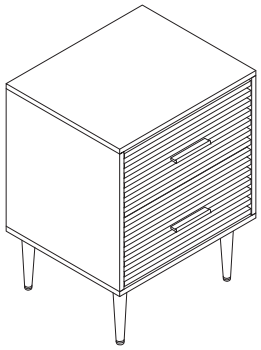

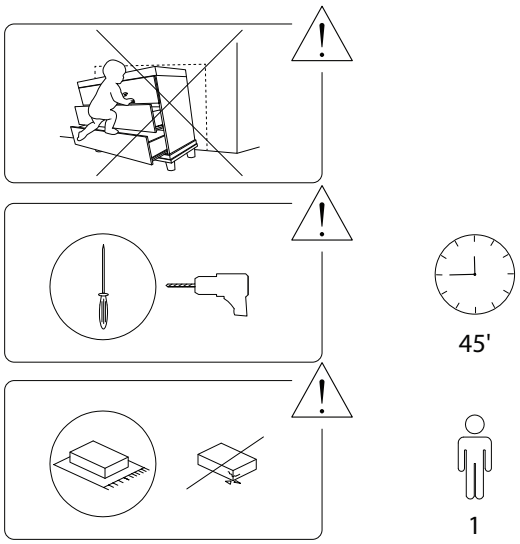

2303/KEITH/250924/

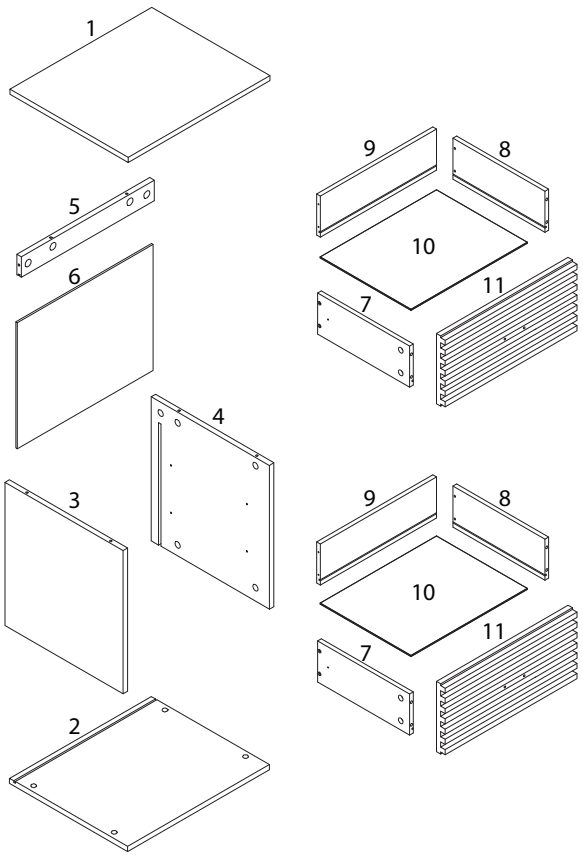

2303/KEITH/250924/

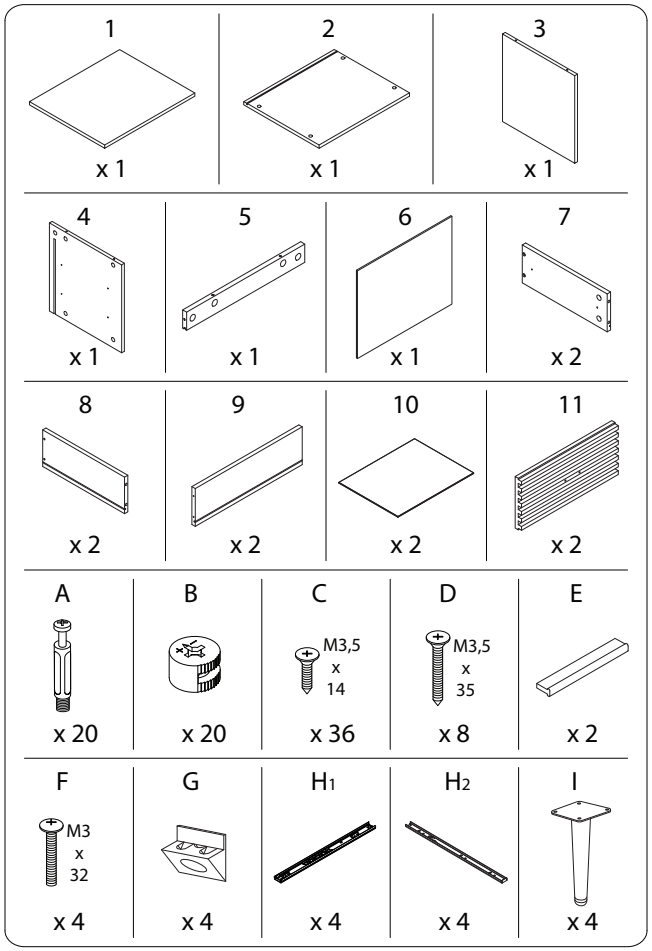

2303/KEITH/250924/

!

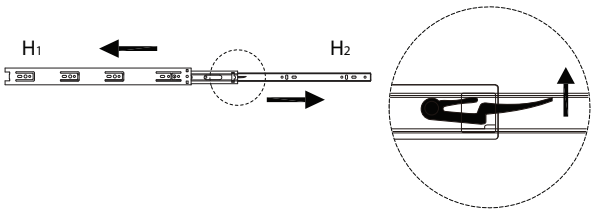
H1
H2

2

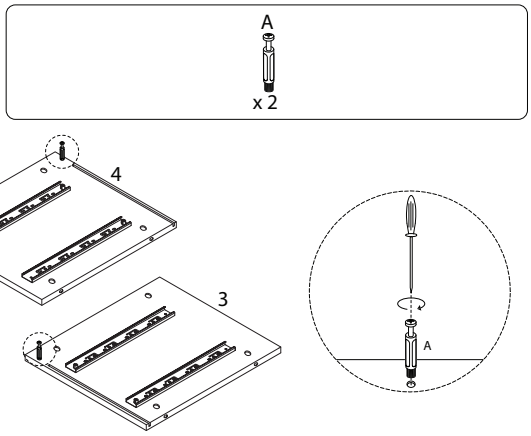
A
x 2
4
3
A

1

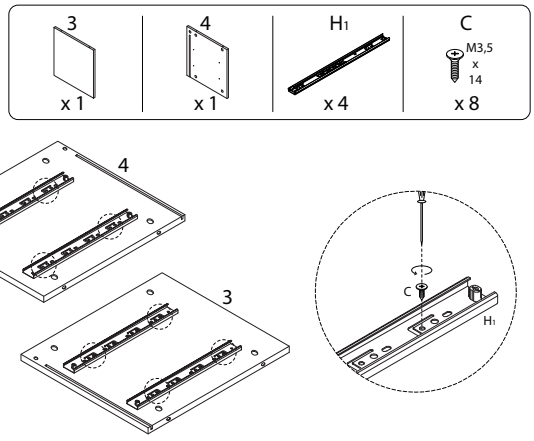
3
x 1
4
x 1
H1
x 4
C
M3,5
x
14
x 8
4
3
C
H1

3

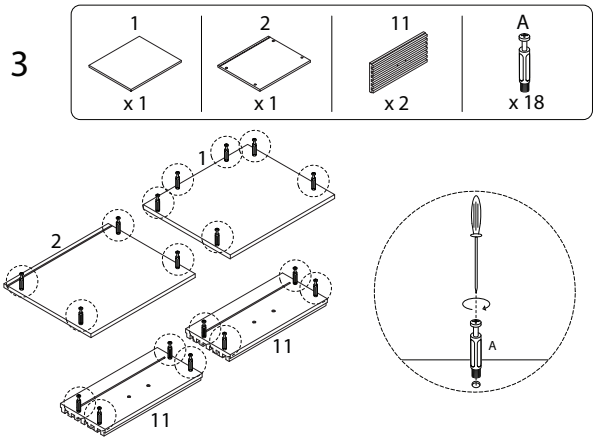
1
x 1
2
x 1
11
x 2
A
x 18
1
2
11
11
A

4

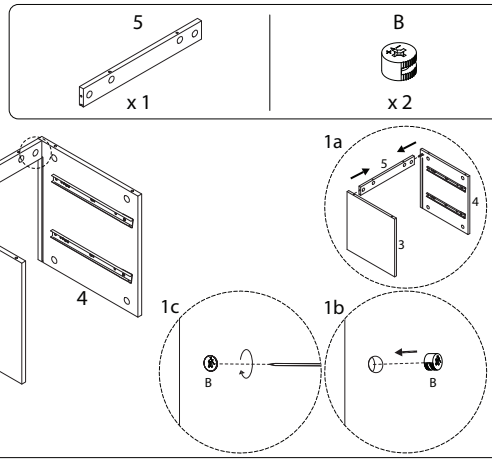
5
x 1
B
x 2
5
4
3
1a
5
4
3
1c
1b
B
B

6

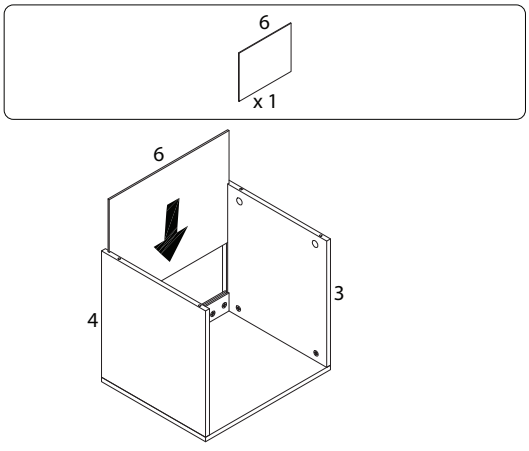
6
x 1
6
4
3

5

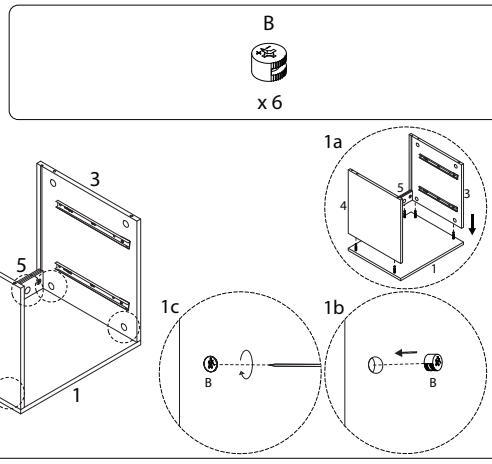
B
x 6
3
4
5
1
1a
5
4
3
1
1c
1b
B
B

7

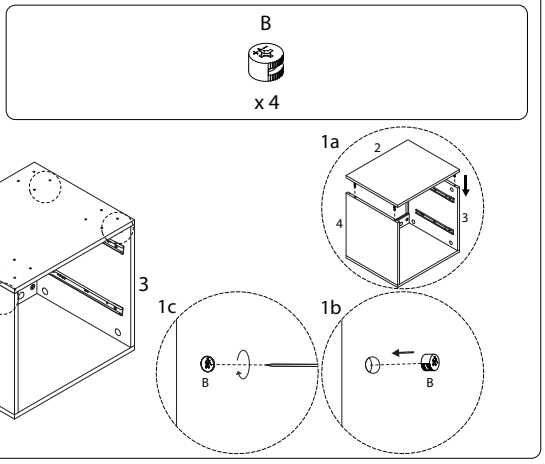
B
x 4
2
3
4
1a
2
4
3
1c
1b
B
B

8

C
M3,5 x 14
x 16

I
x 4

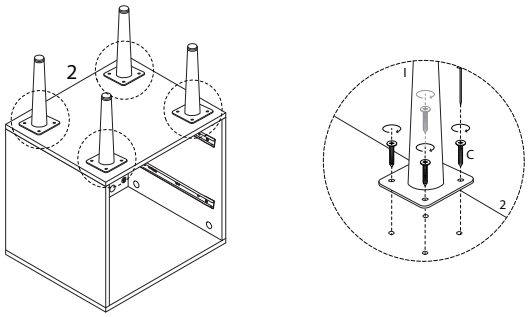

9

C
M3,5 x 14
x 4

G
x 4

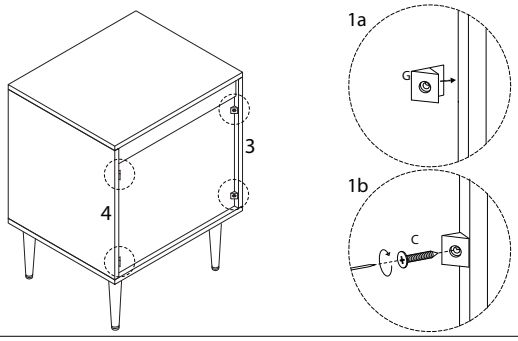

10 x 2

E
x 1

F
M3 x 32
x 2

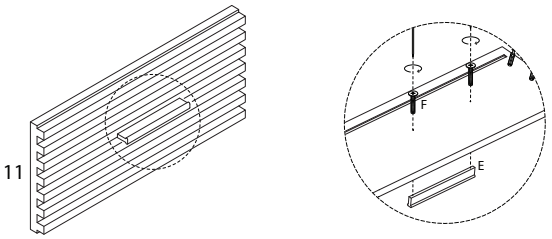

11 x 2

7
x 1

8
x 1

9
x 1

D
M4 x 30
x 4

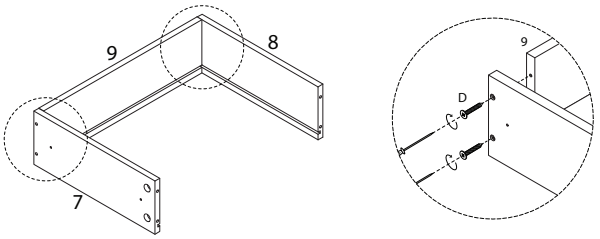

12 x 2

10
x 1

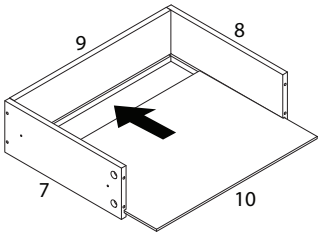

13 x 2

B
x 4

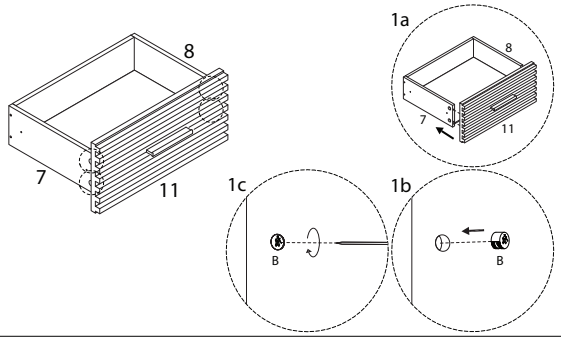

14 x 2

C
M3,5 x 14
x 4

H_2
x 2

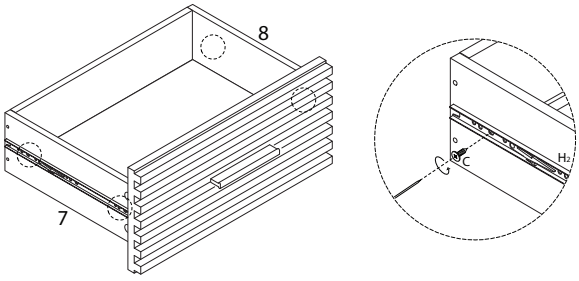

15

