ARDAL

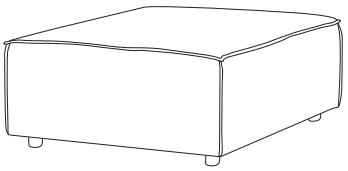

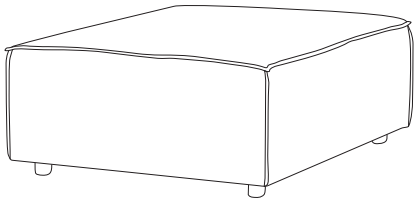

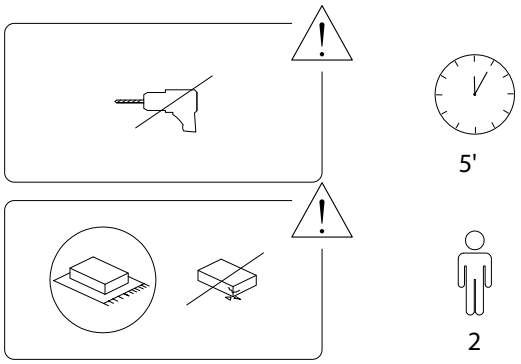

1/4

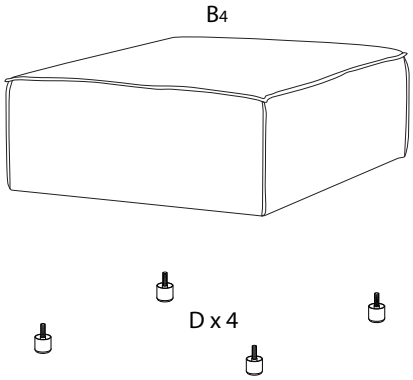

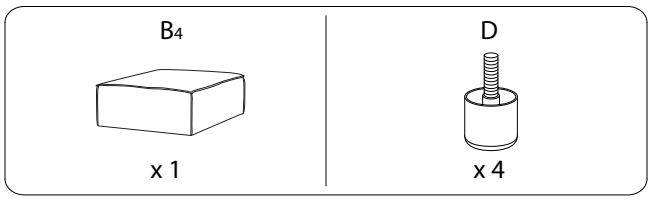

2/4

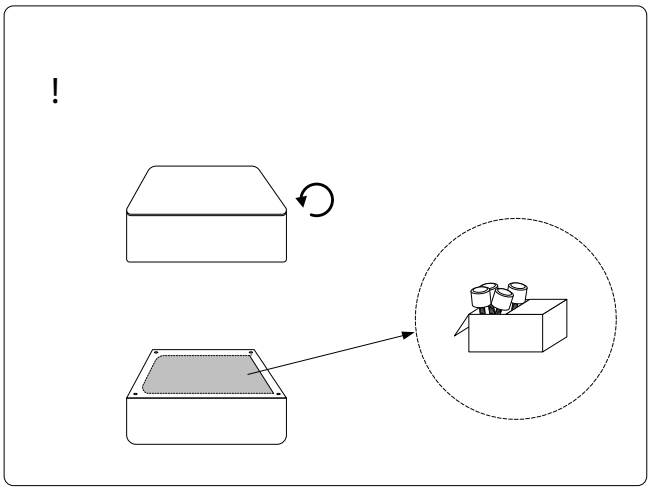

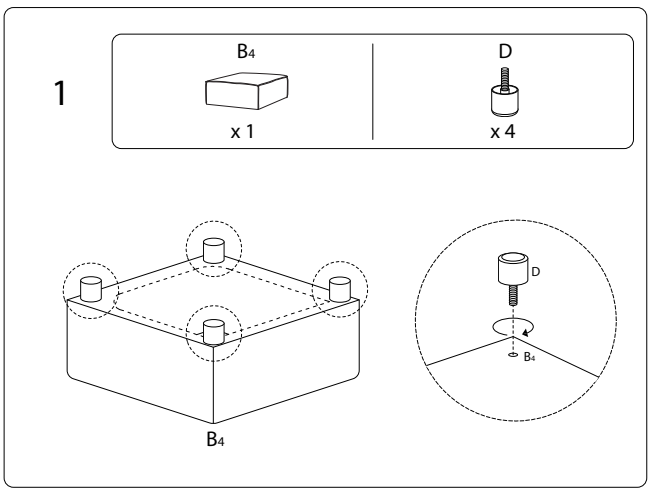

3/4

!

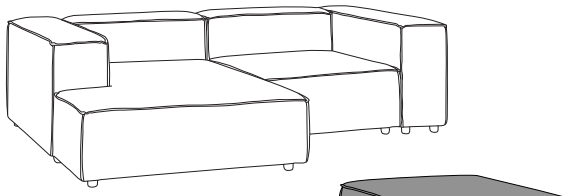

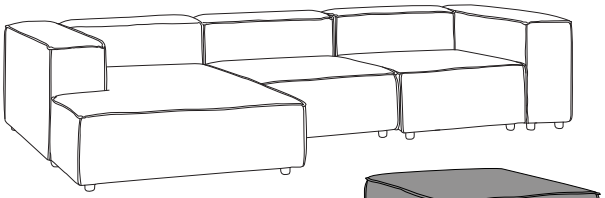



600/ARDAL/251024/