ALCESTER

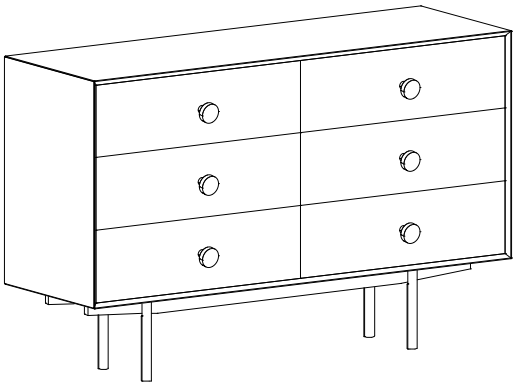

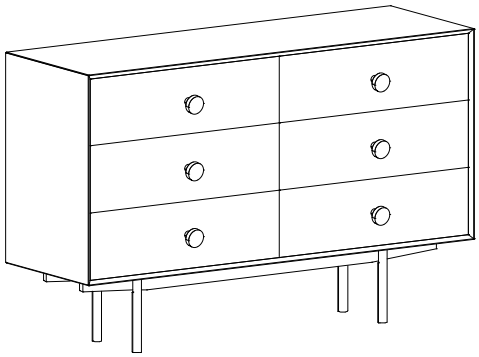

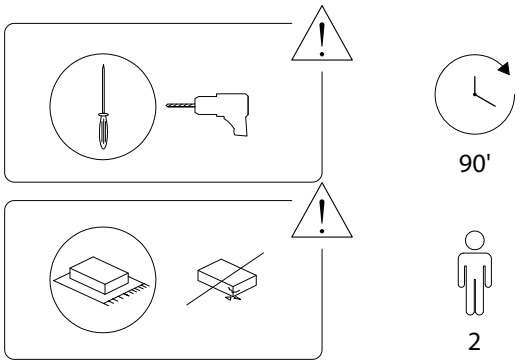
90'
2

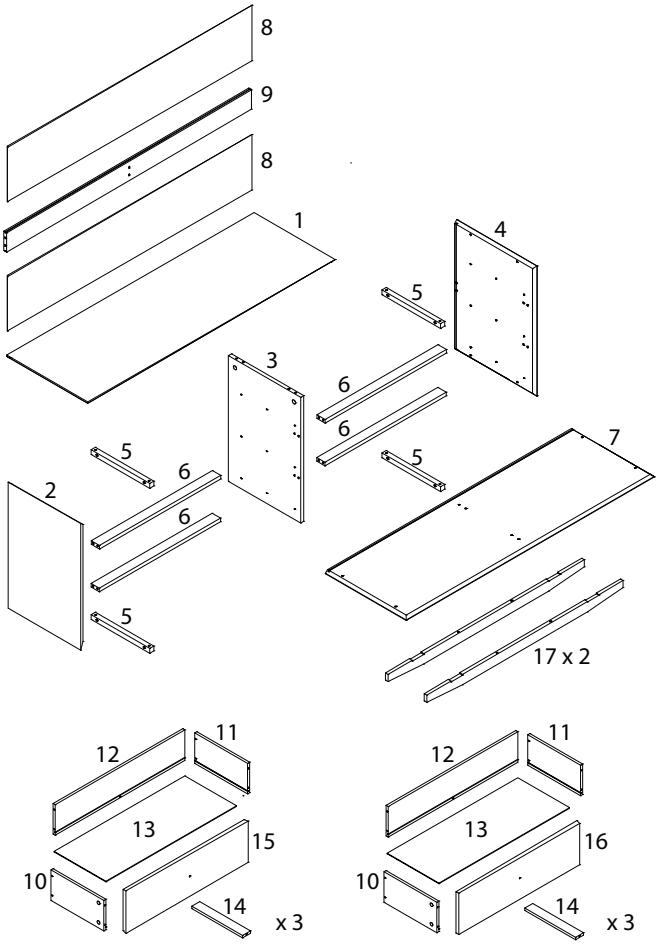
8
9
8
1
4
5
3
6
6
5
7
5
6
2
6
5
17 x 2
12
11
13
15
10
14
x 3
12
11
13
16
10
14
x 3

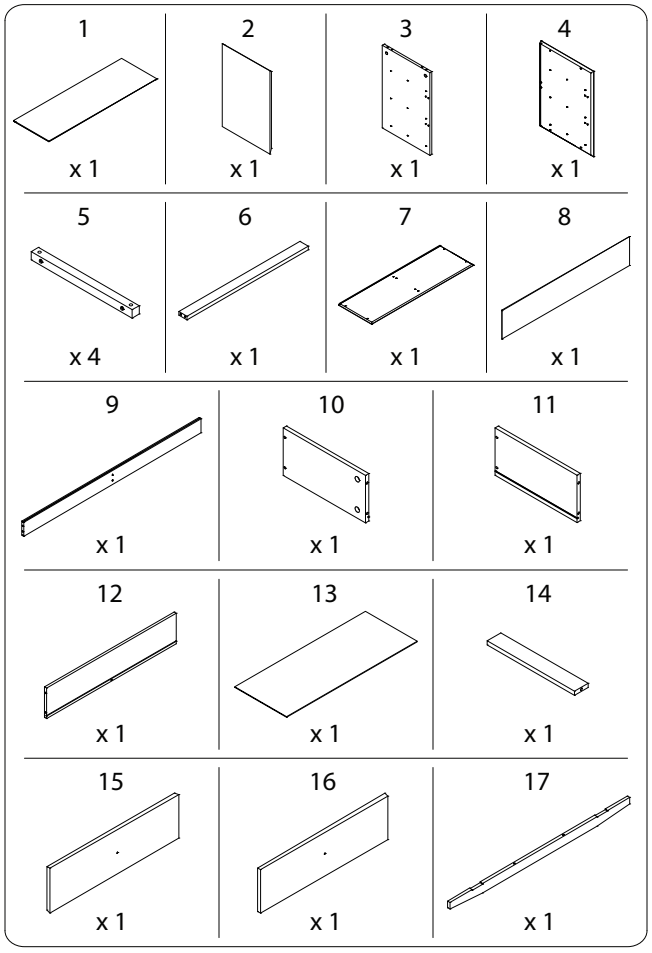
1
x 1
2
x 1
3
x 1
4
x 1
5
x 4
6
x 1
7
x 1
8
x 1
9
x 1
10
x 1
11
x 1
12
x 1
13
x 1
14
x 1
15
x 1
16
x 1
17
x 1

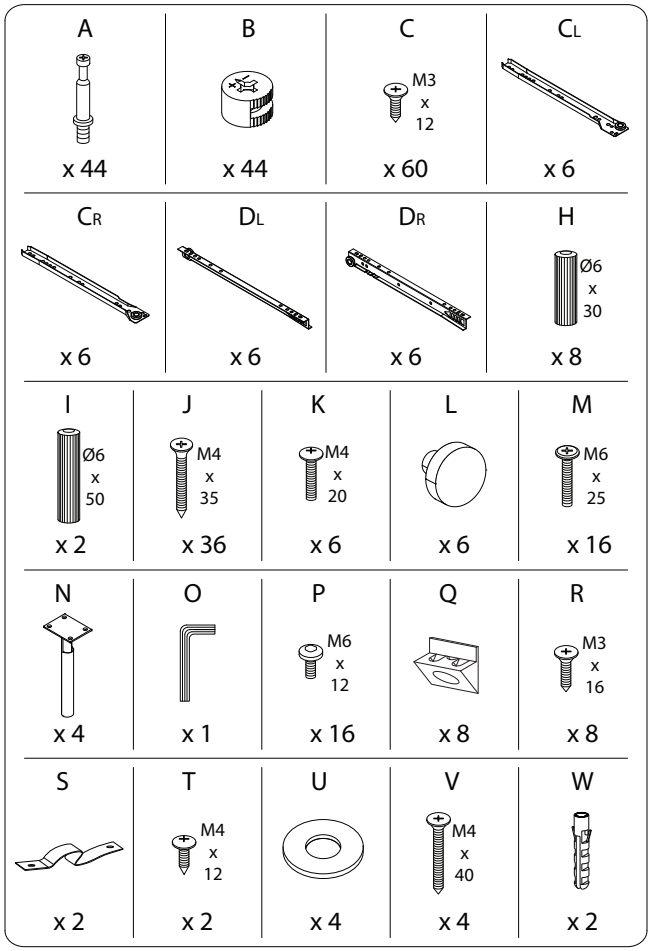
A x 44
B x 44
C M3 x 12 x 60
CL x 6
CR x 6
DL x 6
DR x 6
H Ø6 x 30 x 8
I Ø6 x 50 x 2
J M4 x 35 x 36
K M4 x 20 x 6
L x 6
M M6 x 25 x 16
N x 4
O x 1
P M6 x 12 x 16
Q x 8
R M3 x 16 x 8
S x 2
T M4 x 12 x 2
U x 4
V M4 x 40 x 4
W x 2

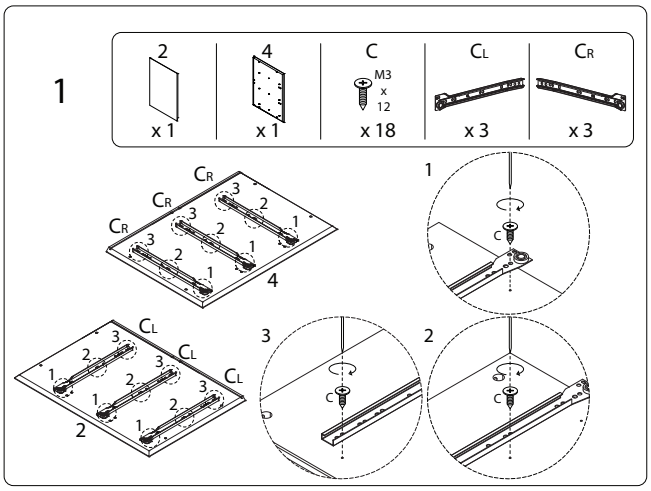
1
2 x 1
4 x 1
C M3 x 12 x 18
CL x 3
CR x 3

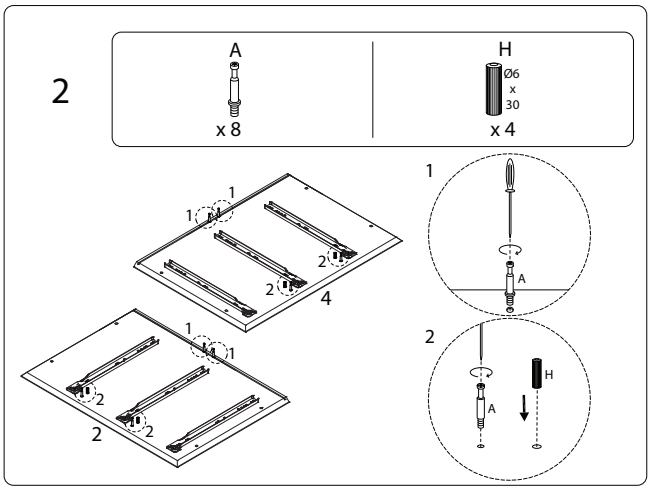
2
A x 8
H Ø6 x 30 x 4

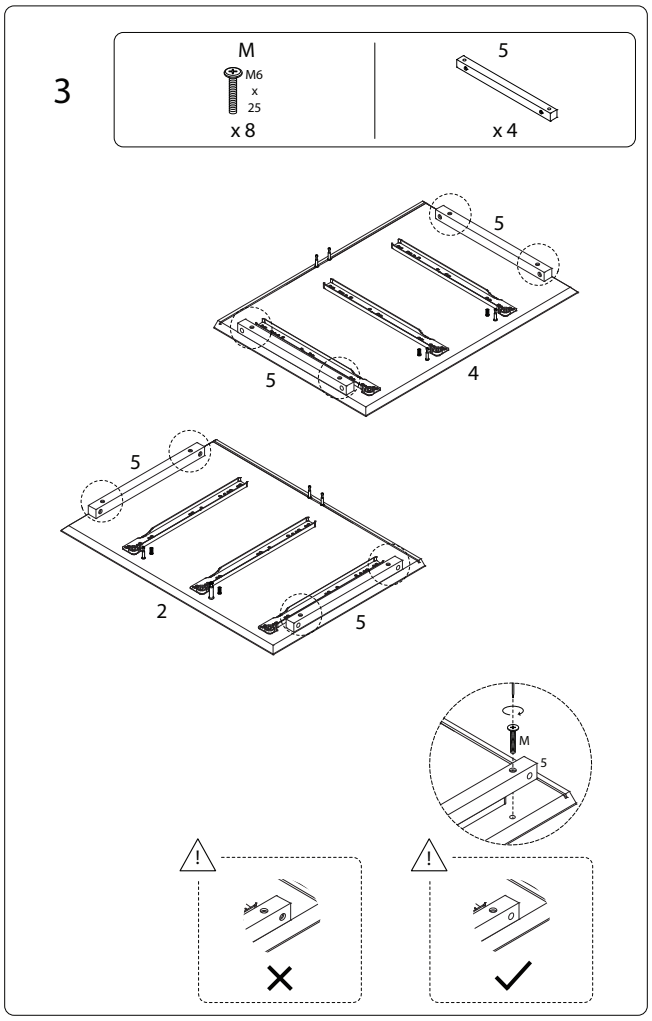
3
M M6 x 25 x 8
5 x 4

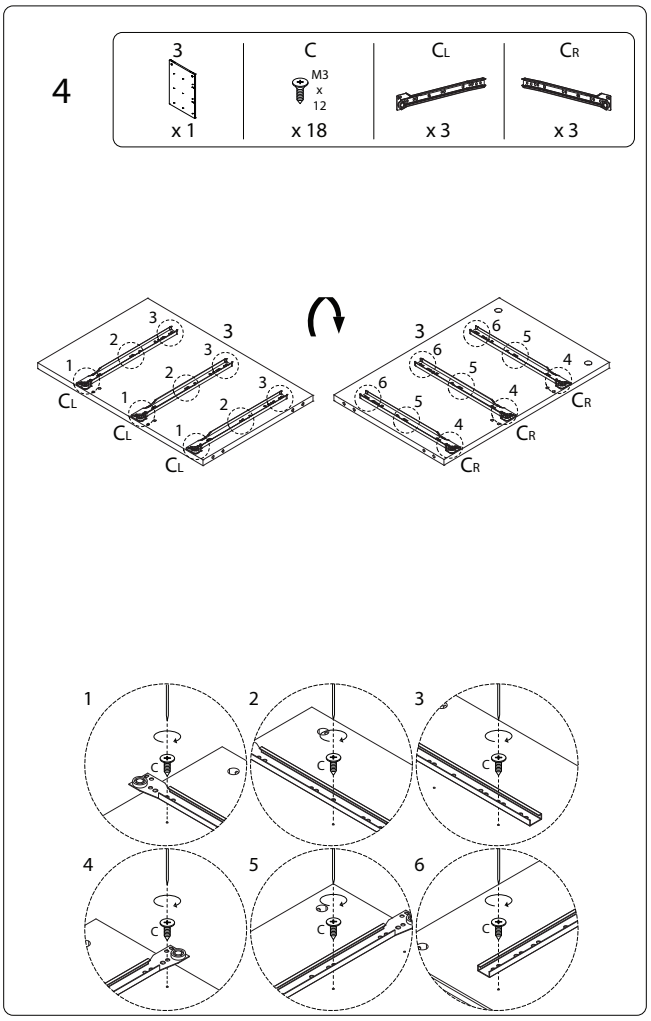
4
3 x 1
C M3 x 12 x 18
CL x 3
CR x 3

5

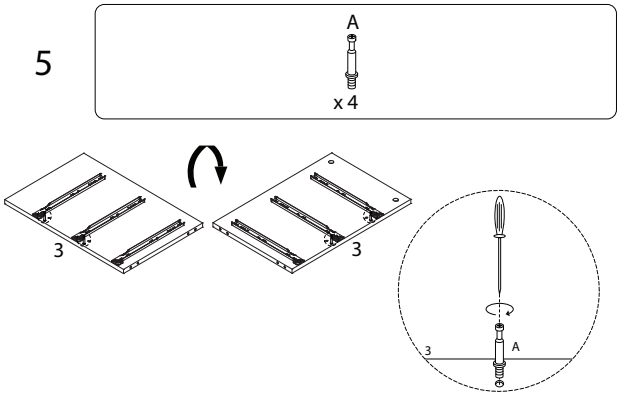
A
x 4
3
3
3
A

6

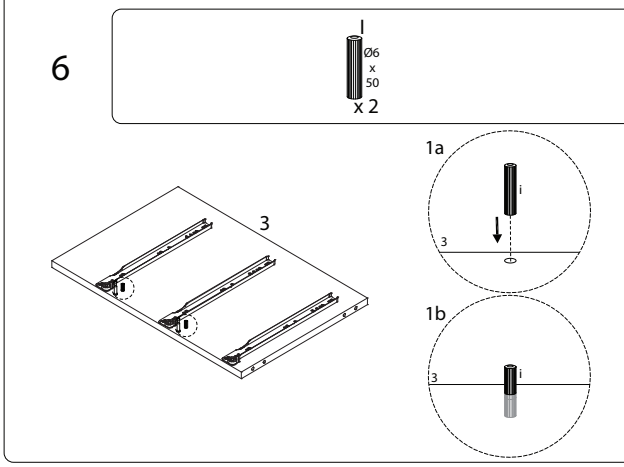
I
Ø6
x
50
x 2
3
1a
I
3
1b
I
3

7

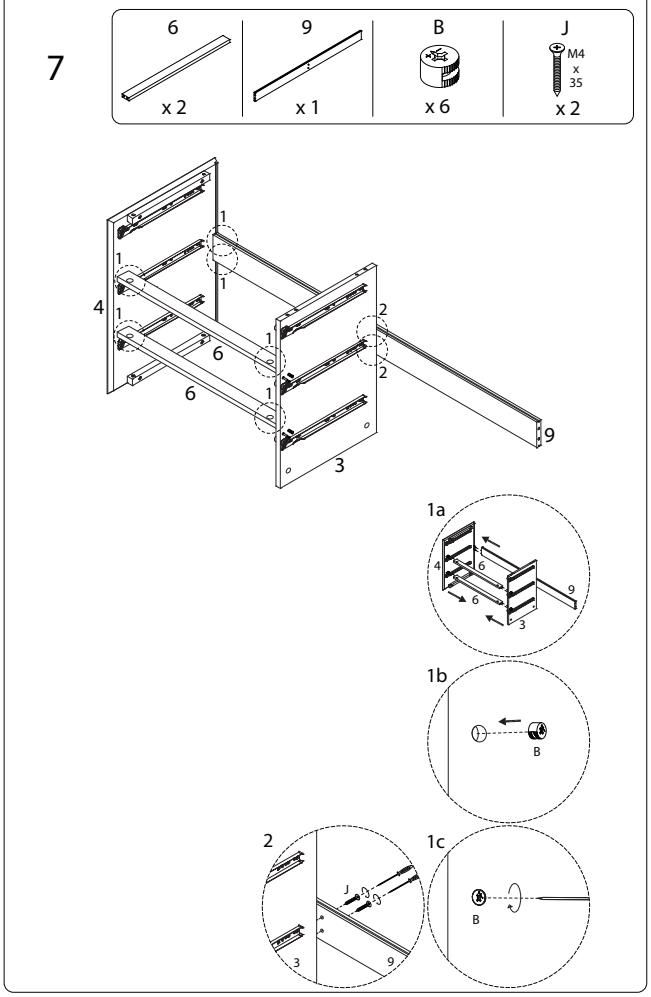
6
x 2
9
x 1
B
x 6
J
M4
x
35
x 2
1
1
1
4
1
6
1
6
1
2
2
9
3
1a
4
6
6
9
3
1b
B
2
J
3
9
1c
B

8

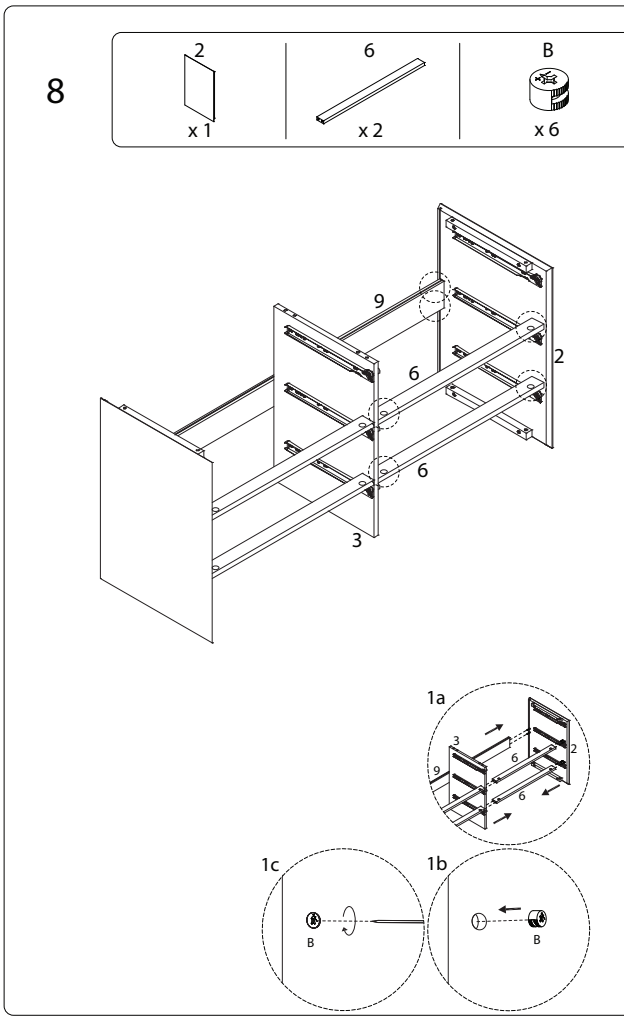
2
x 1
6
x 2
B
x 6
9
6
2
6
3
1a
3
6
2
9
6
1c
B
1b
B

9

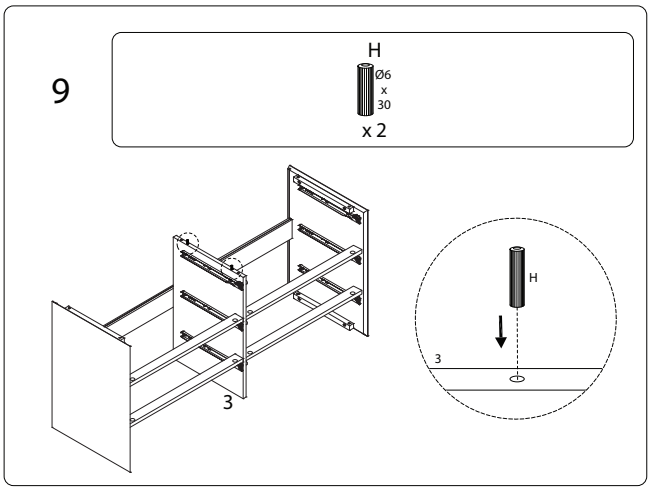
H
Ø6
x
30
x 2
H
3
3

10

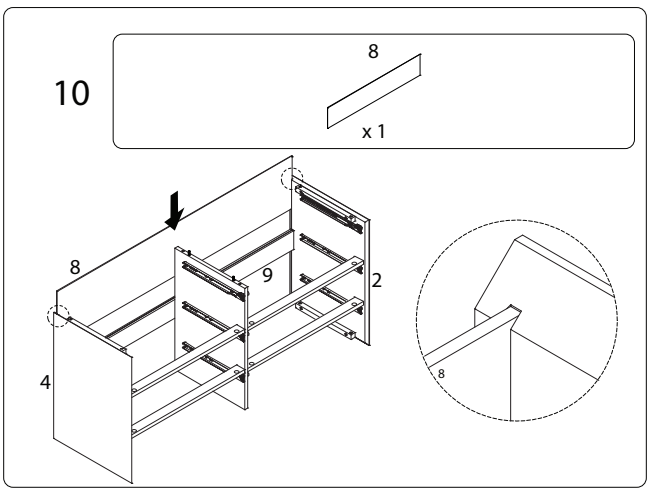
8
x 1
8
9
2
4
8

11

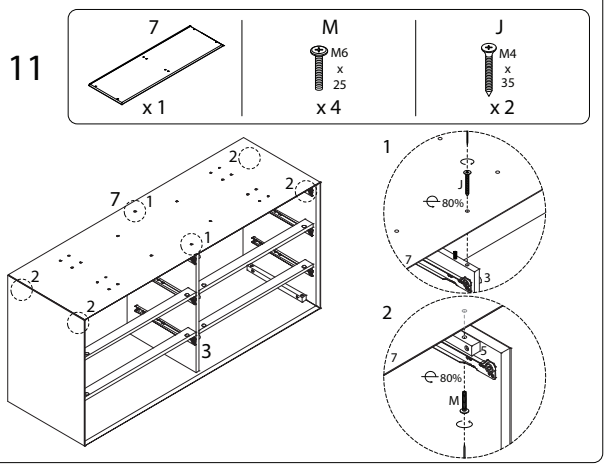

12

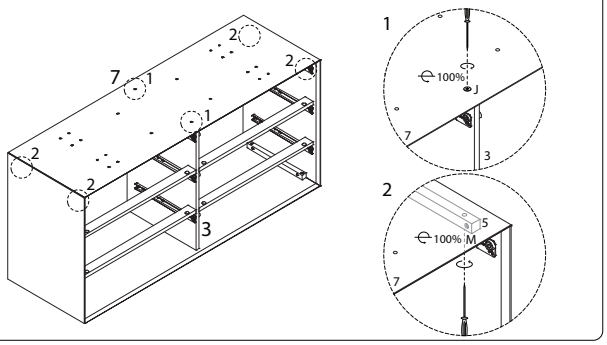

13

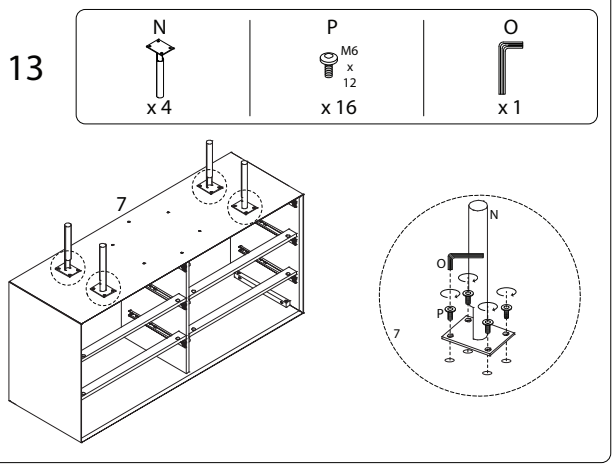

14

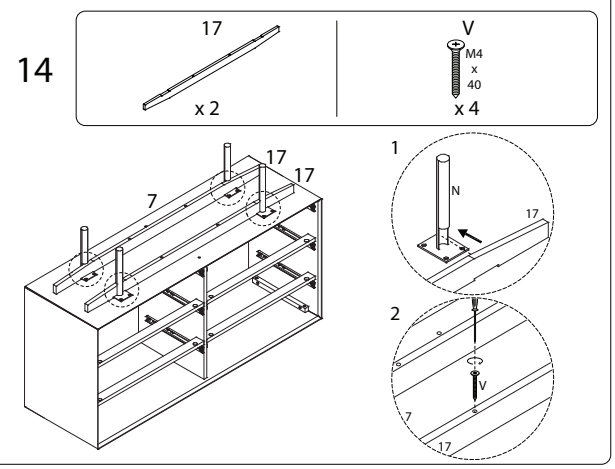

15

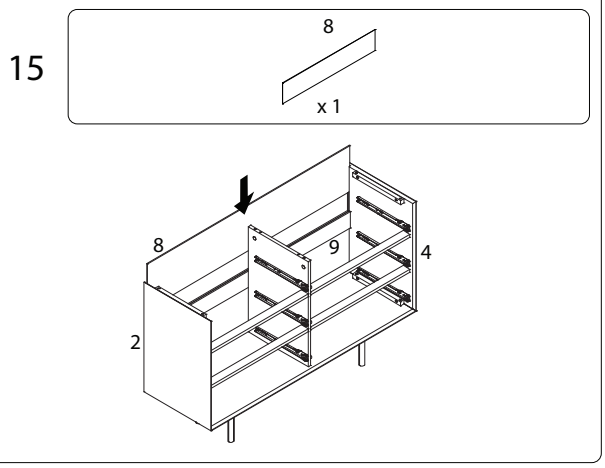

16

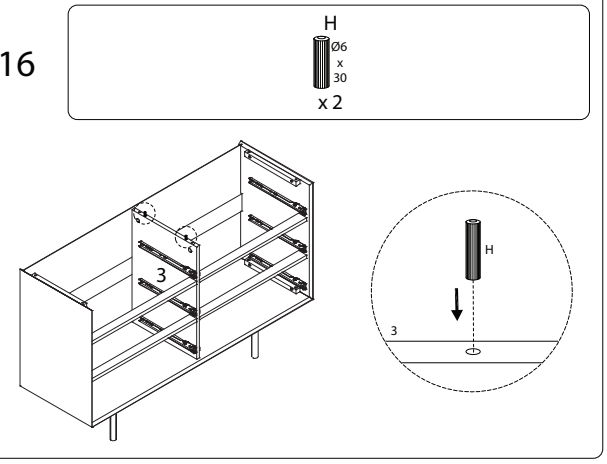

17

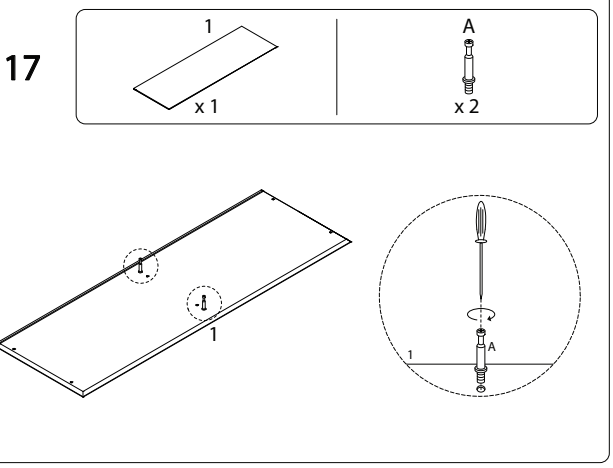

18

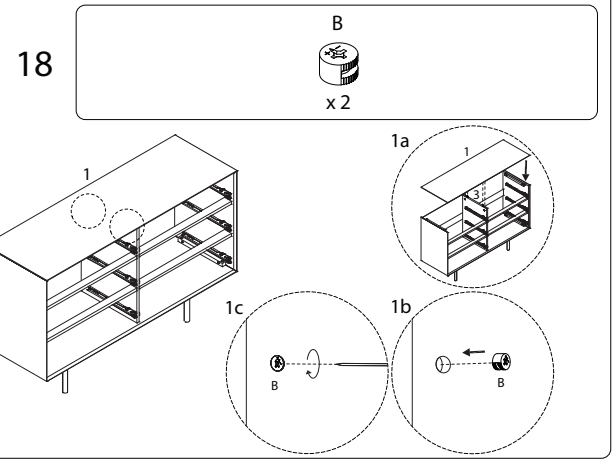

19

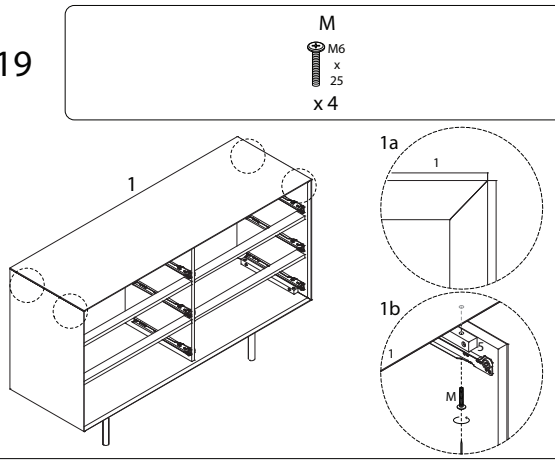

20 x 3

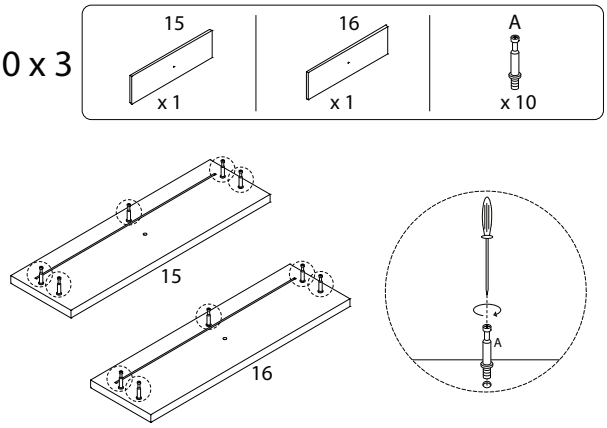

21 x 3

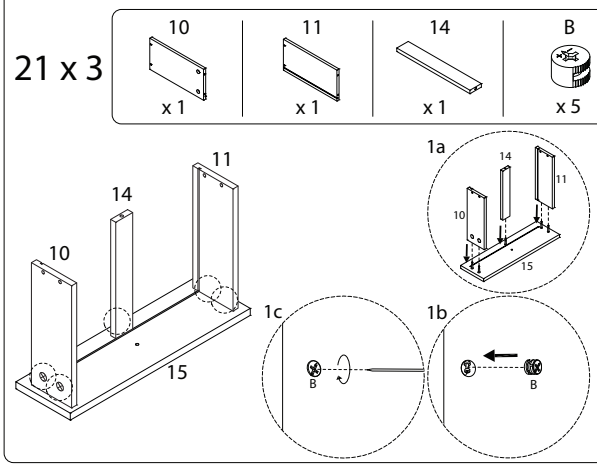

22 x 3

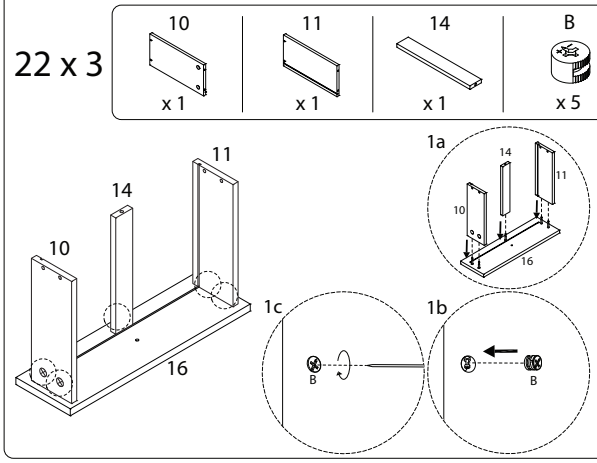

23 x 3

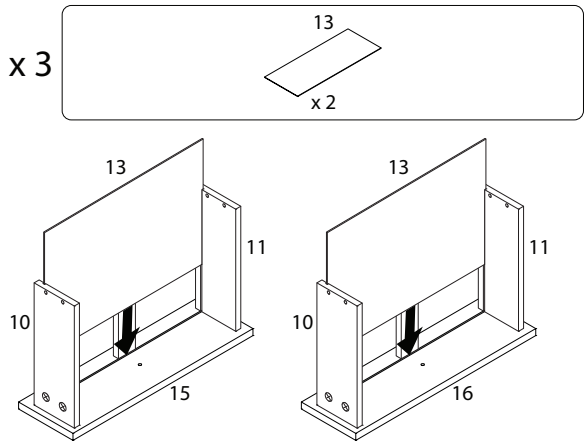

24 x 3

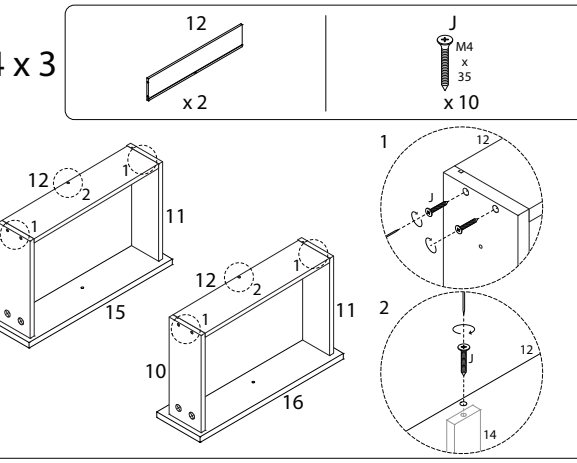

25 x 3

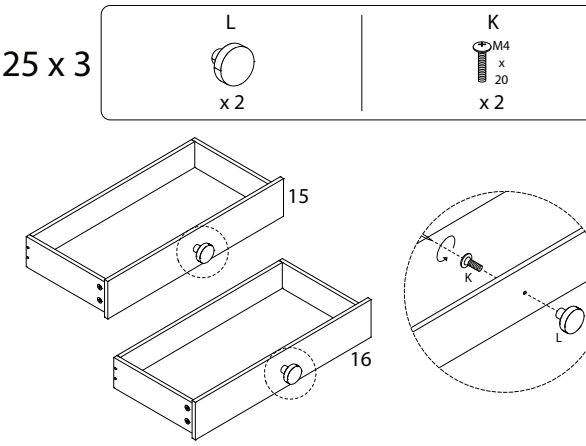

26 x 3

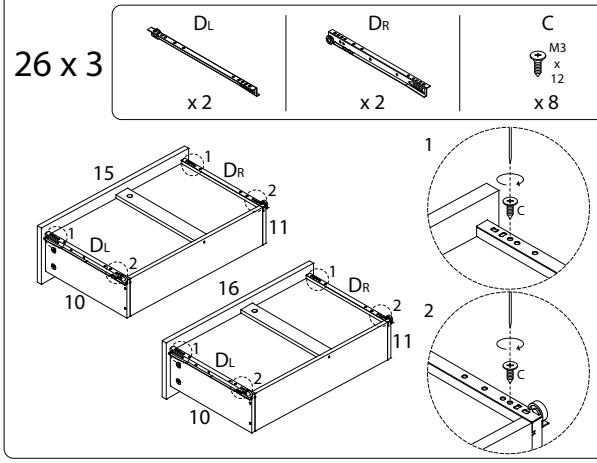

27

Q	R
x 8	M3 x 16 x 8

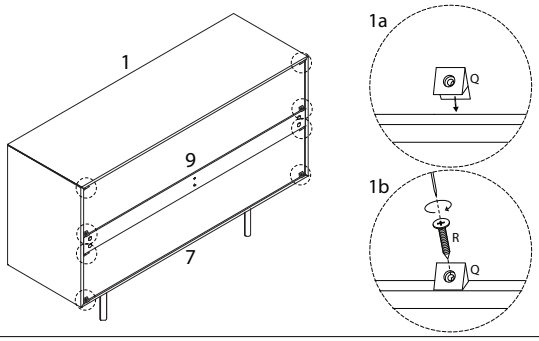

28

S	T	U
x 2	M4 x 12 x 2	x 2

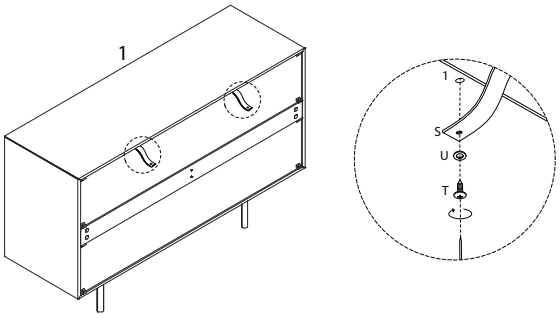

29

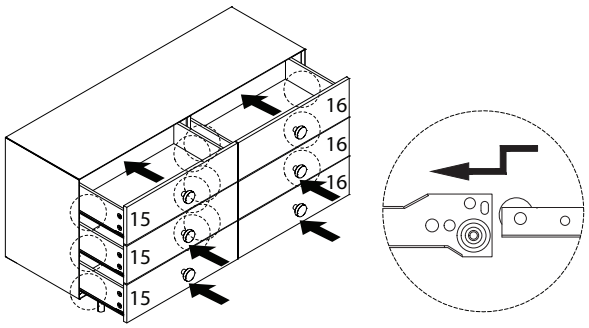

30
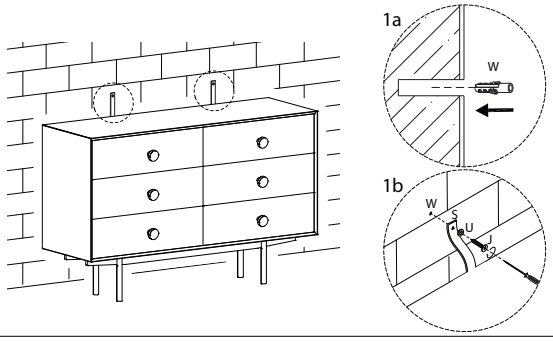
J	U	W
M4 x 35 x 2	x 2	x 2