HAMILTON

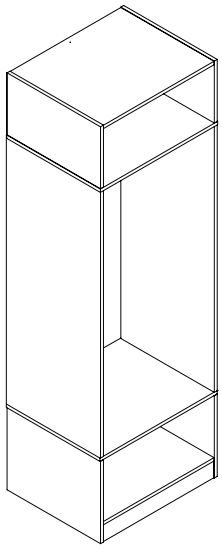

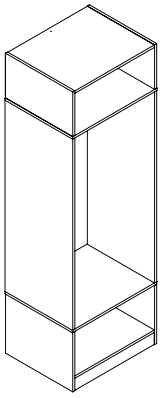

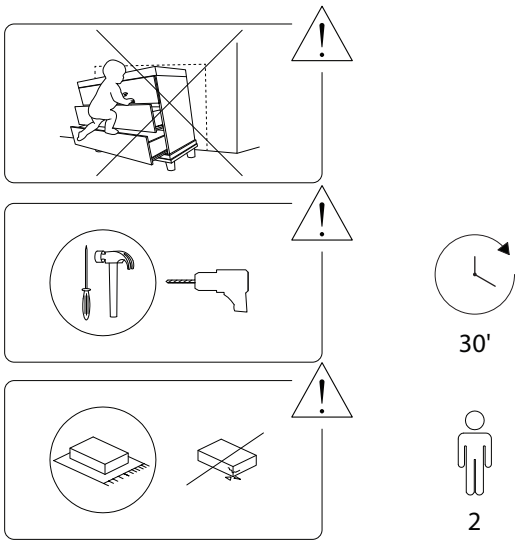
30'
2

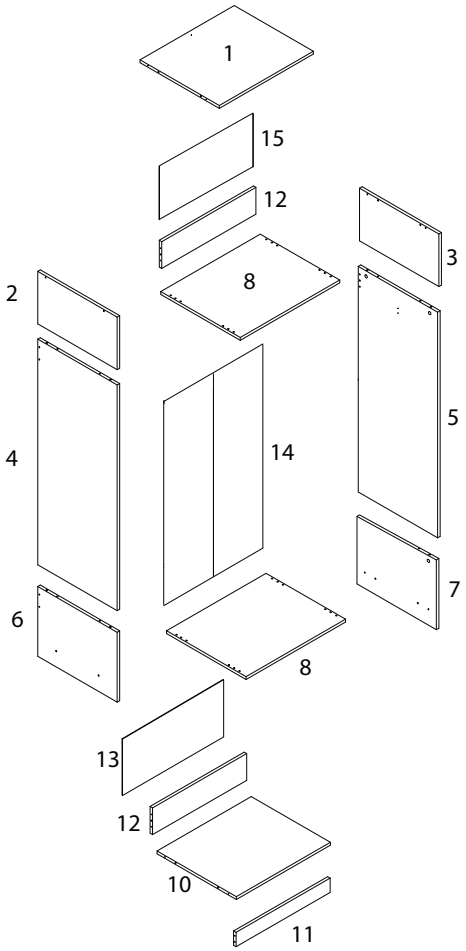
1
15
12
3
8
2
4
14
5
6
8
7
13
12
10
11

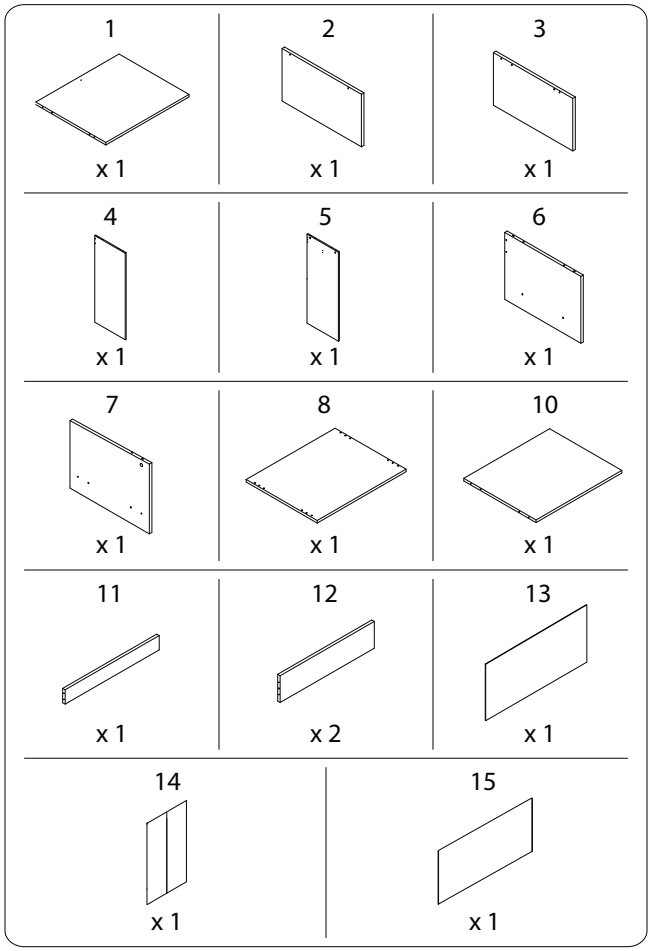
1
x 1
2
x 1
3
x 1
4
x 1
5
x 1
6
x 1
7
x 1
8
x 1
10
x 1
11
x 1
12
x 2
13
x 1
14
x 1
15
x 1

A	B	C
		
x 8	x 8	x 16
D	**E**	**F**
 M4 x 40		
x 24	x 16	x 4
G	**H**	**I**
	 M4 x 14	 M4 x 30
x 32	x 1	x 1
J	**K**	**L**
		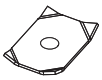
x 1	x 1	x 6
M	**N**	**O**	**P**
			 M3 x 14
x 8	x 2	x 1	x 4

1

1	10	11	12	C	H	J
x 1	x 1	x 1	x 2	x 16	M4 x 14 x 1	x 1

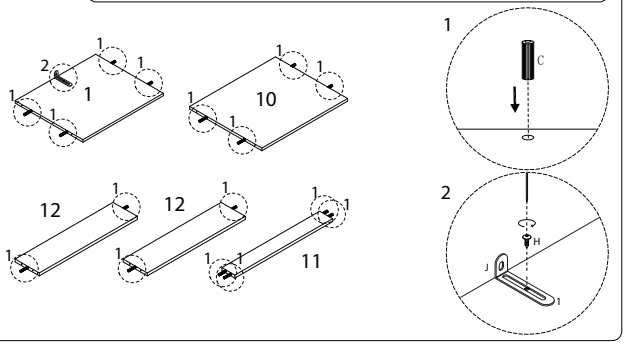

2

2	3	4	5	C
x 1	x 1	x 1	x 1	x 8

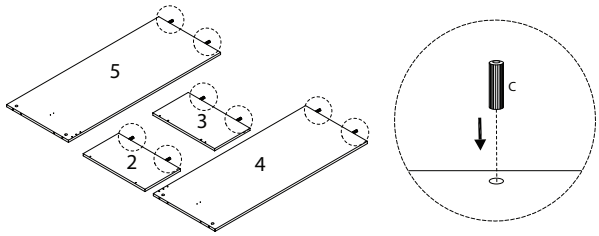

3

D	E
 M4 x 40 x 4	 x 4

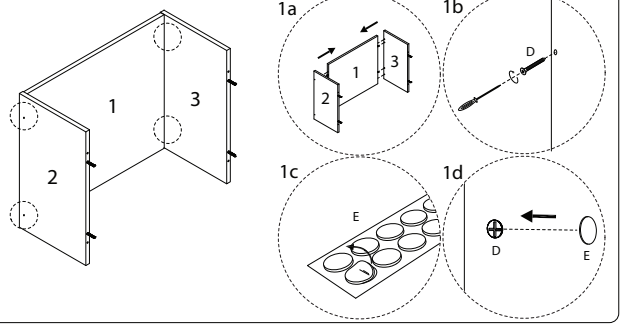

5

D
 M4 x 40 x 4

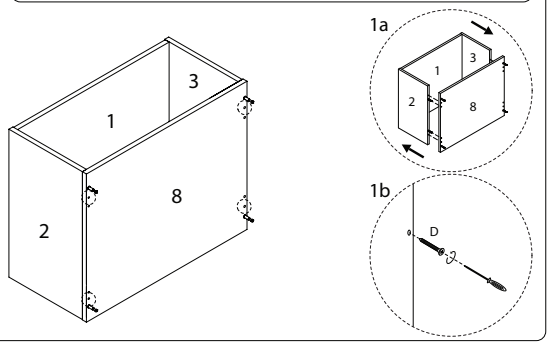

4 x 2

8	A
 x 1	 x 4

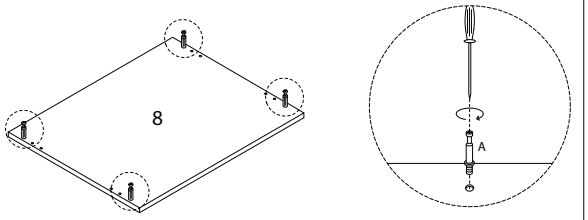

6

N	P
 x 2	 M3 x 14 x 4

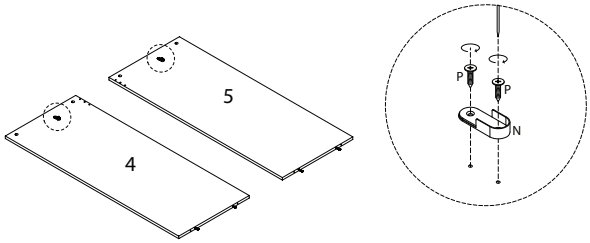

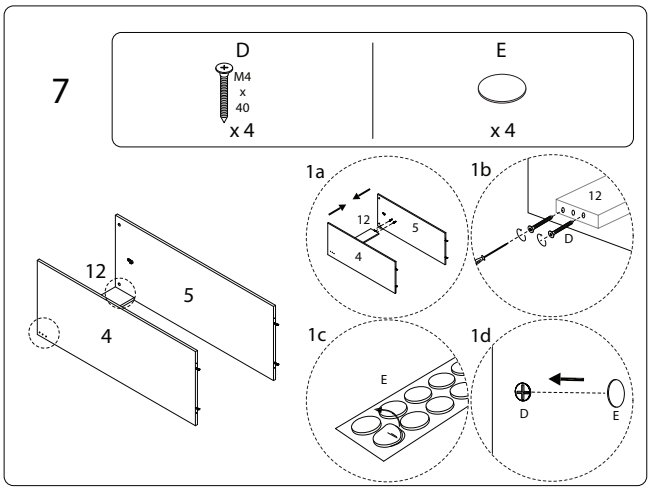
7
D
M4 x 40
x 4
E
x 4
1a
1b
1c
1d
12
5
4
D
E

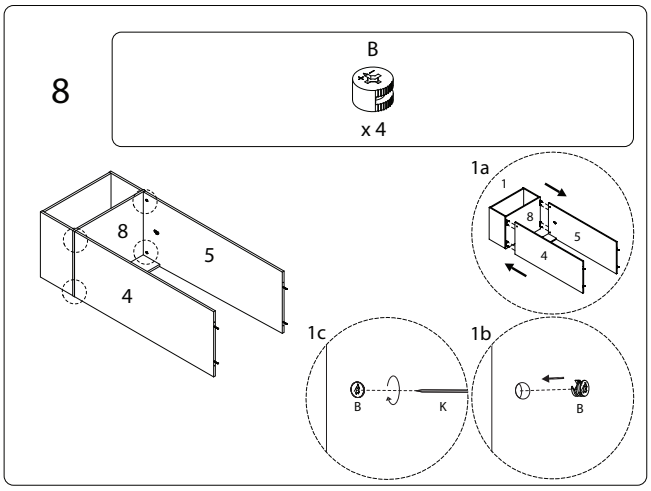
8
B
x 4
1a
1b
1c
8
5
4
B
K

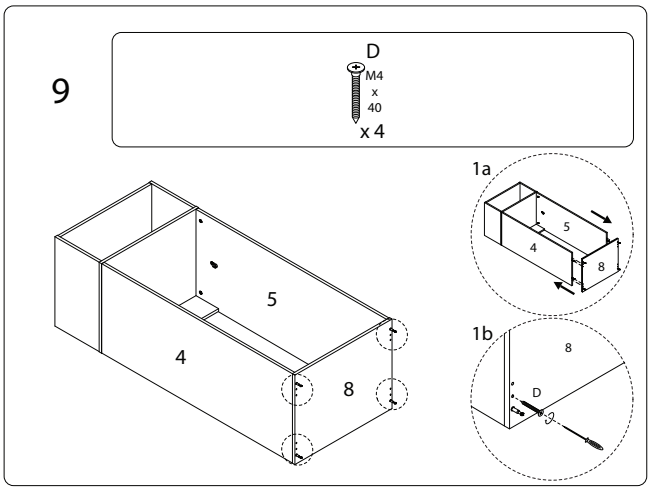
9
D
M4 x 40
x 4
1a
1b
5
4
8
D

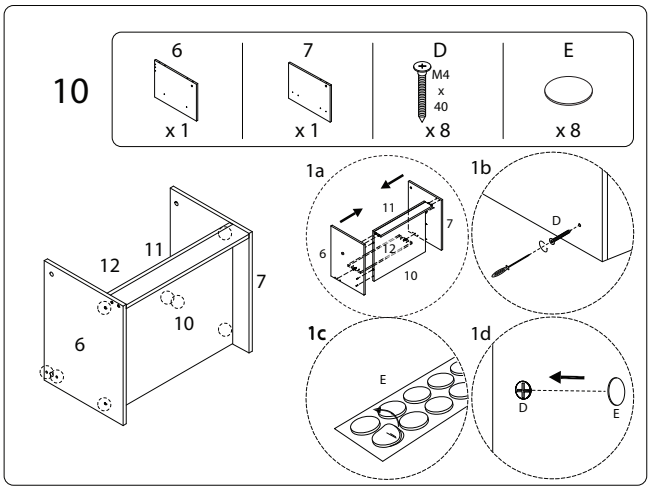
10
6
x 1
7
x 1
D
M4 x 40
x 8
E
x 8
1a
1b
1c
1d
12
11
7
10
6
E
D

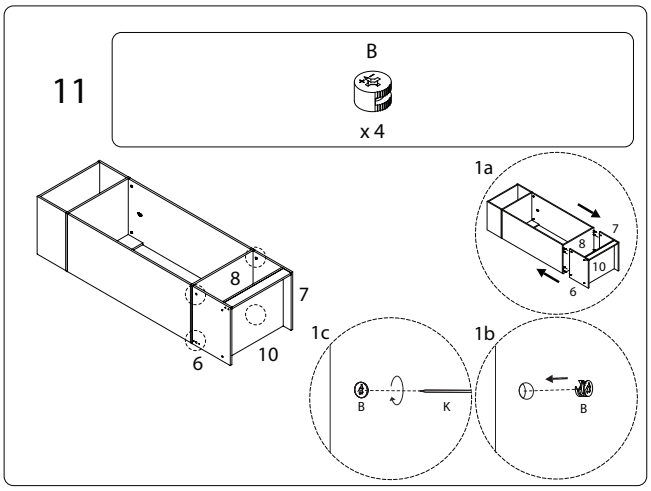
11
B
x 4
1a
1b
1c
8
7
6
10
B
K

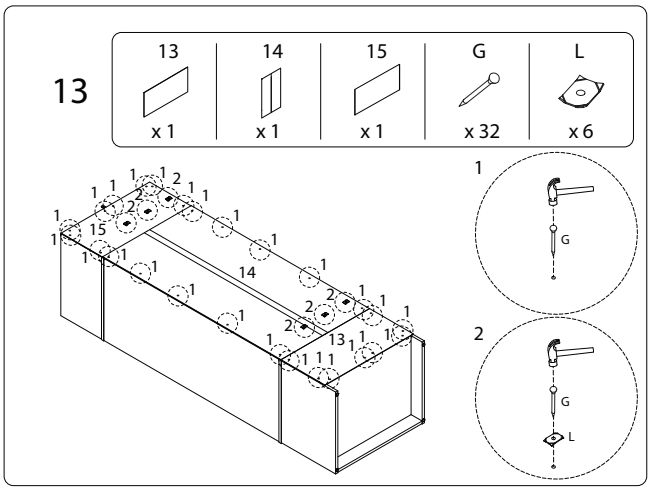
13
x 1
14
x 1
15
x 1
G
x 32
L
x 6
1
2
G
L

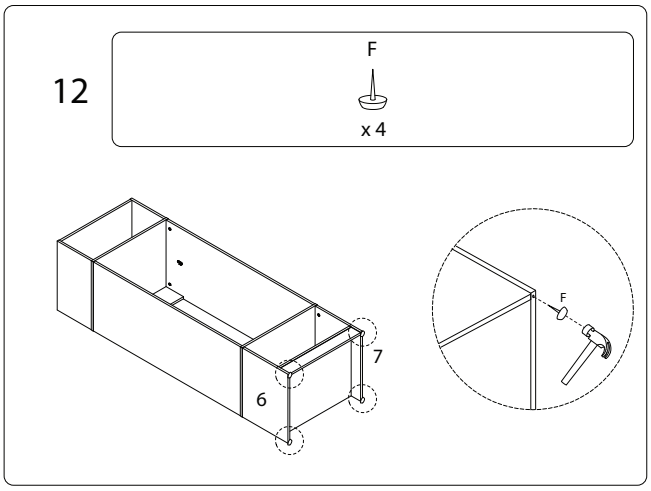
12
F
x 4
7
6
F

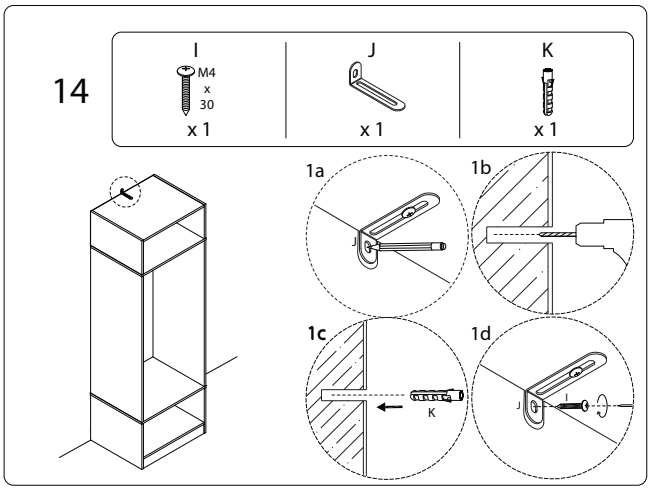
14
I
M4 x 30
x 1
J
x 1
K
x 1
1a
1b
1c
1d
J
K

15

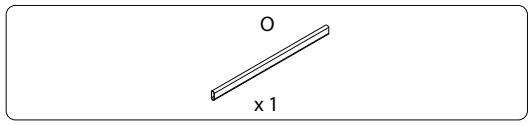

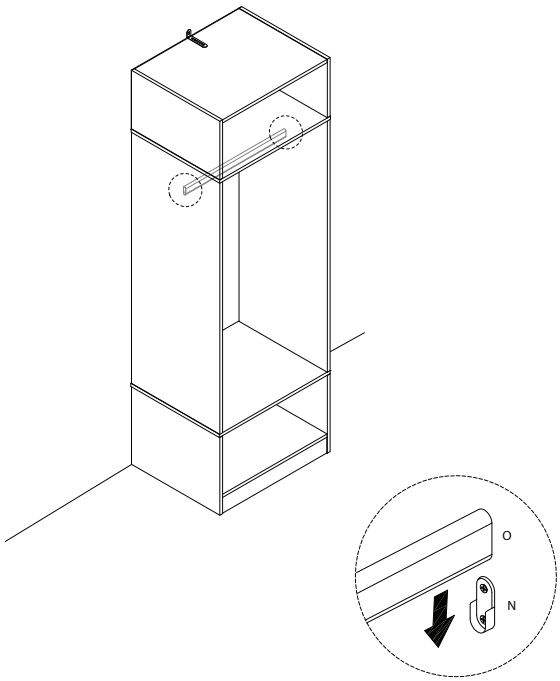

2949/HAMILTON/210926