CARAQUET

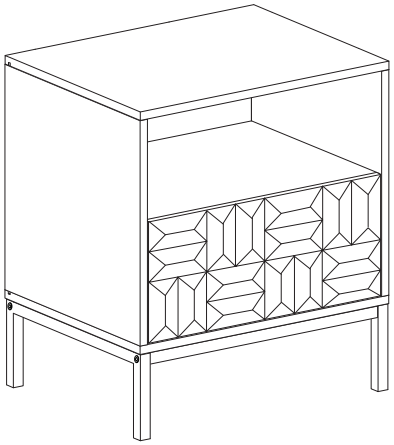

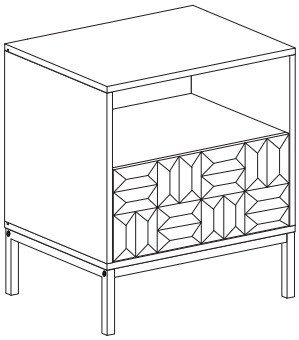

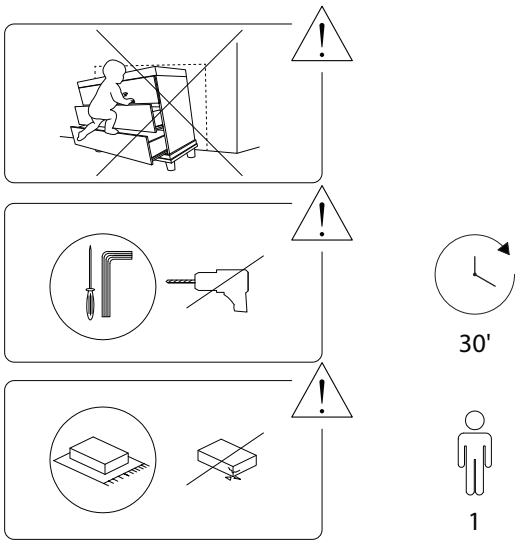
30'
1

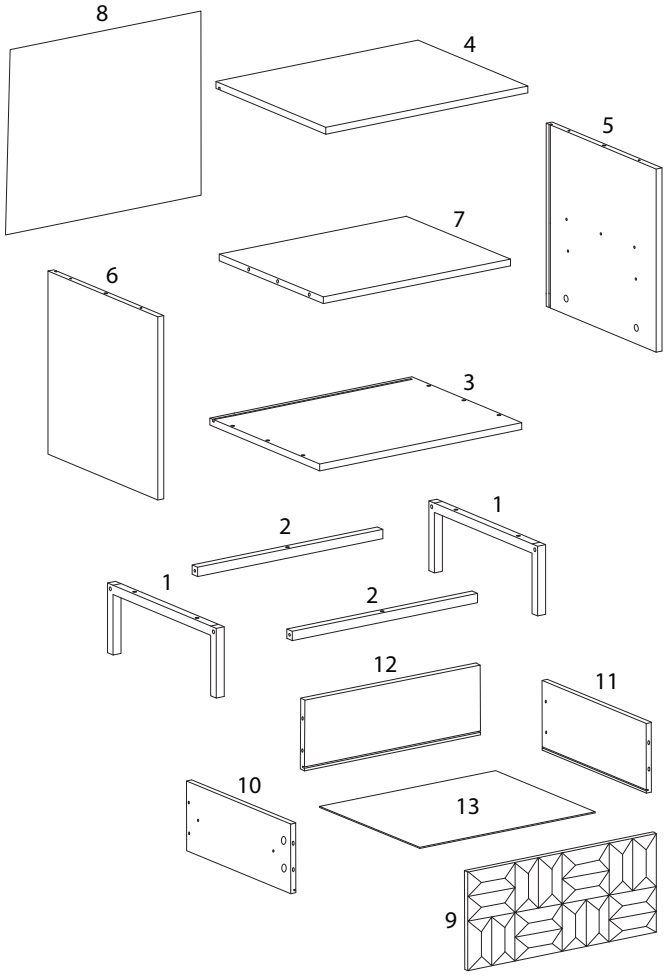
8
4
5
7
6
3
2
1
1
2
12
11
10
13
9

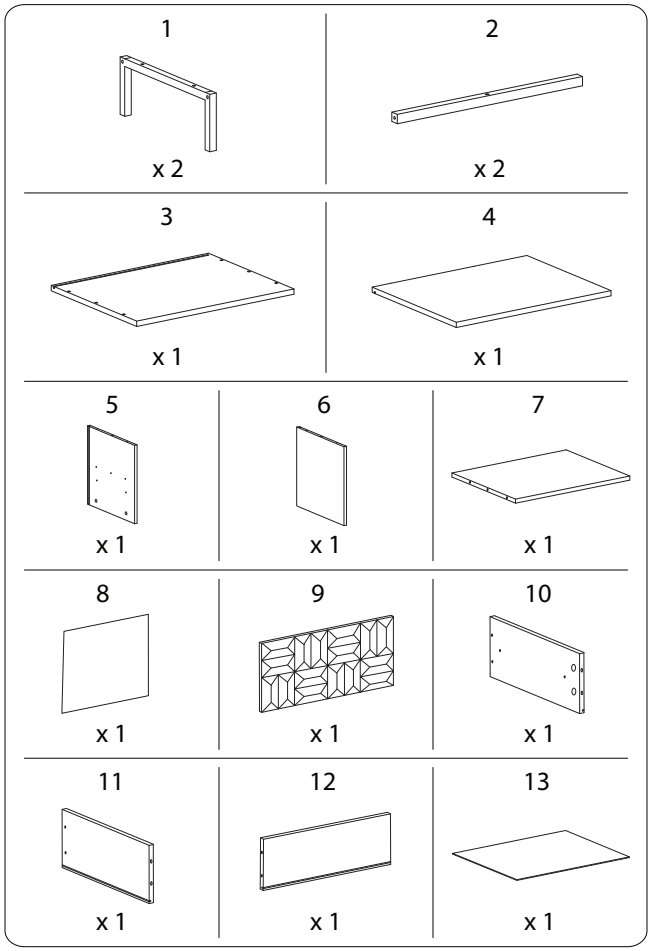
1
x 2
2
x 2
3
x 1
4
x 1
5
x 1
6
x 1
7
x 1
8
x 1
9
x 1
10
x 1
11
x 1
12
x 1
13
x 1

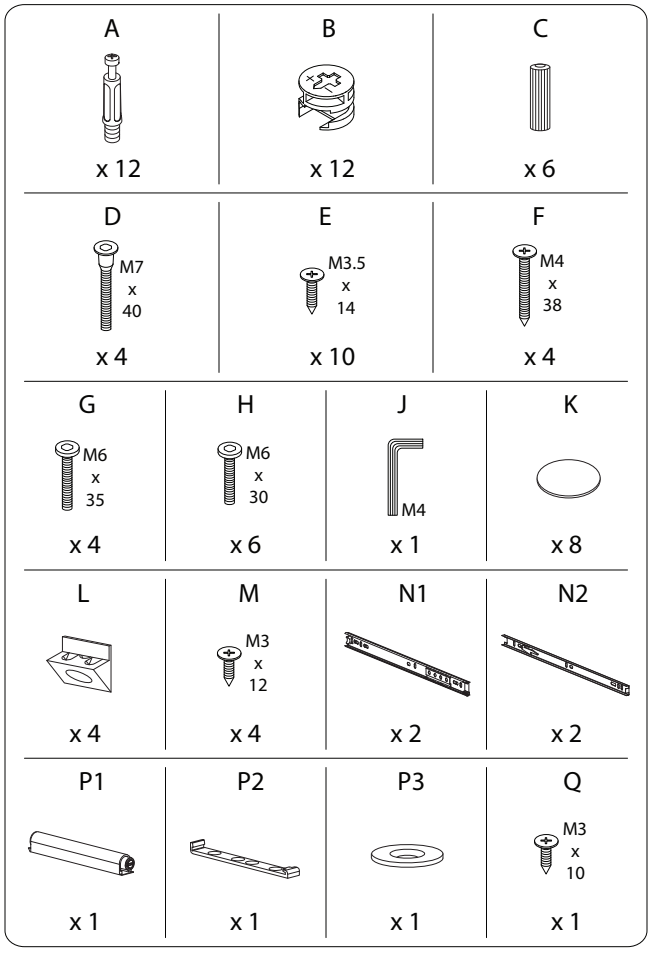
A
x 12
B
x 12
C
x 6
D
M7 x 40
x 4
E
M3.5 x 14
x 10
F
M4 x 38
x 4
G
M6 x 35
x 4
H
M6 x 30
x 6
J
M4
x 1
K
x 8
L
x 4
M
M3 x 12
x 4
N1
x 2
N2
x 2
P1
x 1
P2
x 1
P3
x 1
Q
M3 x 10
x 1

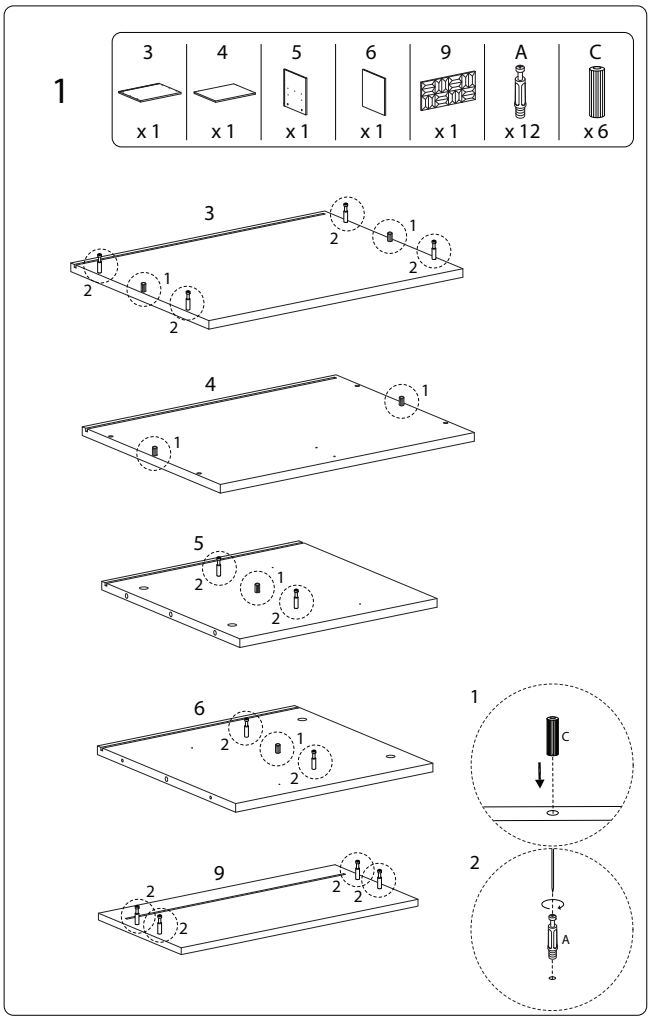
1
3
x 1
4
x 1
5
x 1
6
x 1
9
x 1
A
x 12
C
x 6
3
4
5
6
9
1
C
2
A

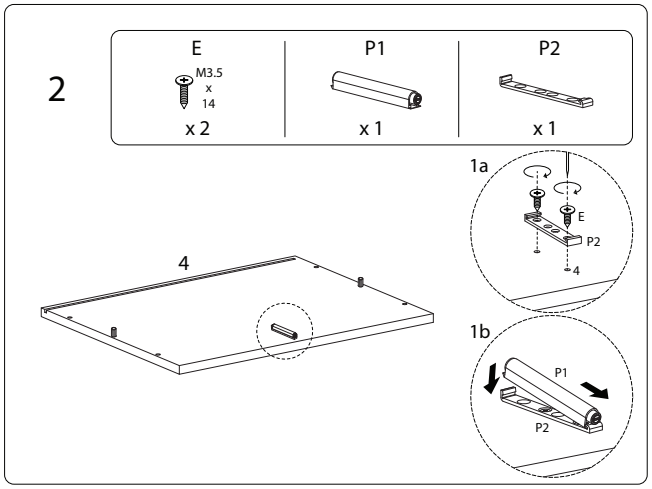
2
E
M3.5 x 14
x 2
P1
x 1
P2
x 1
4
1a
E
P2
4
1b
P1
P2

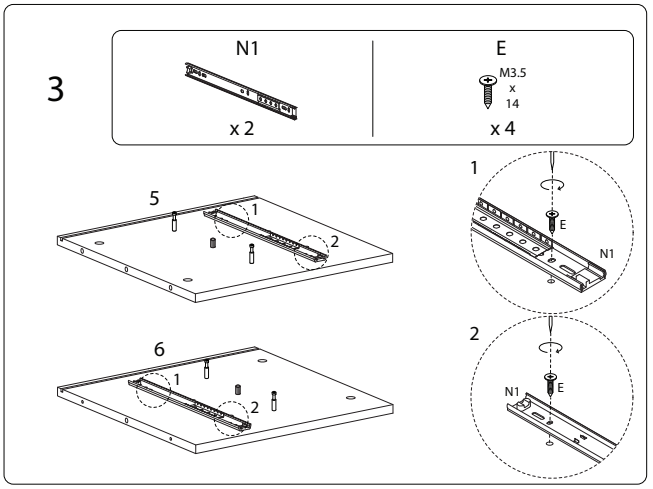
3
N1
x 2
E
M3.5 x 14
x 4
5
6
1
E
N1
2
N1
E

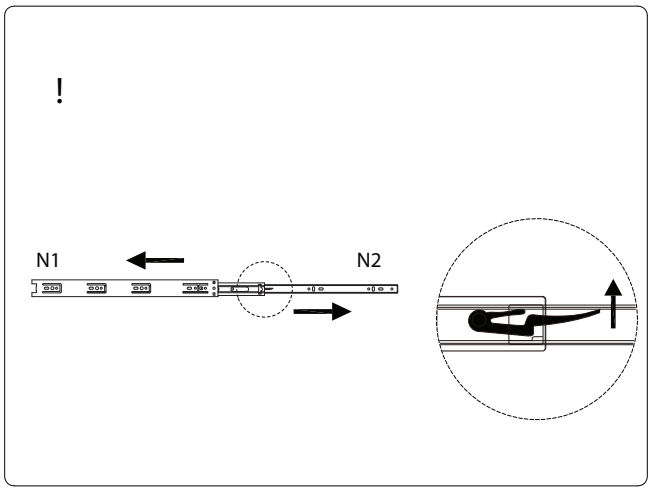
!
N1
N2

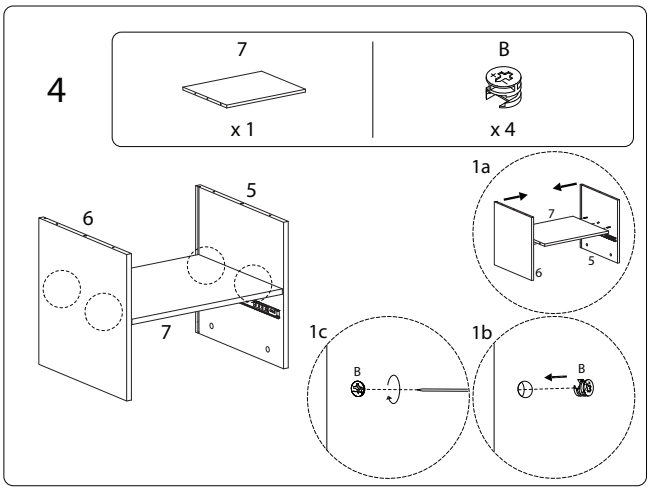
4
7
x 1
B
x 4
1a
5
6
7
1c
B
1b
B

5

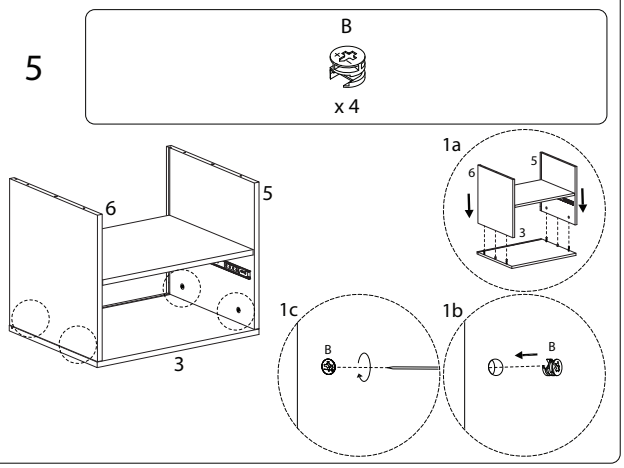

6

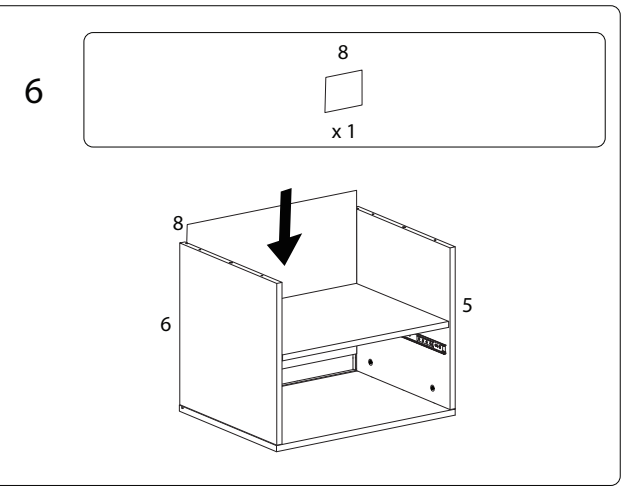

7

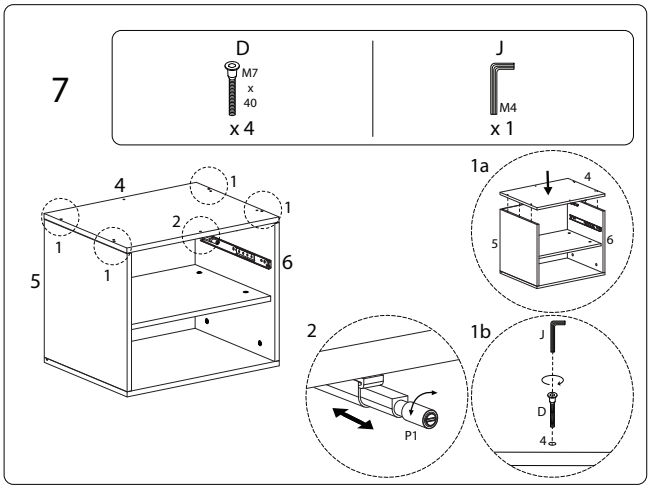

8

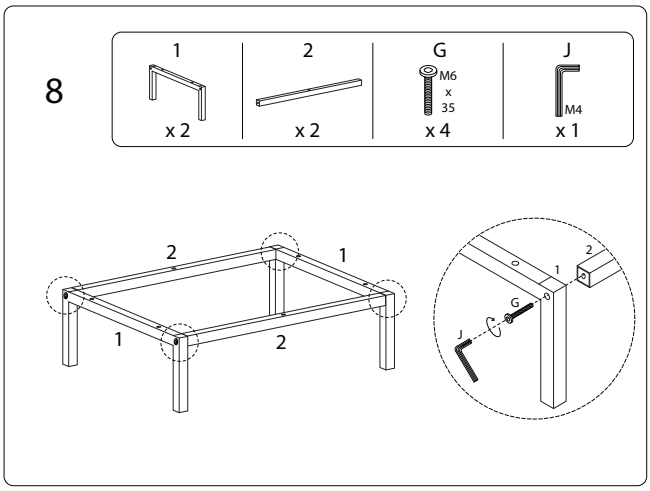

9

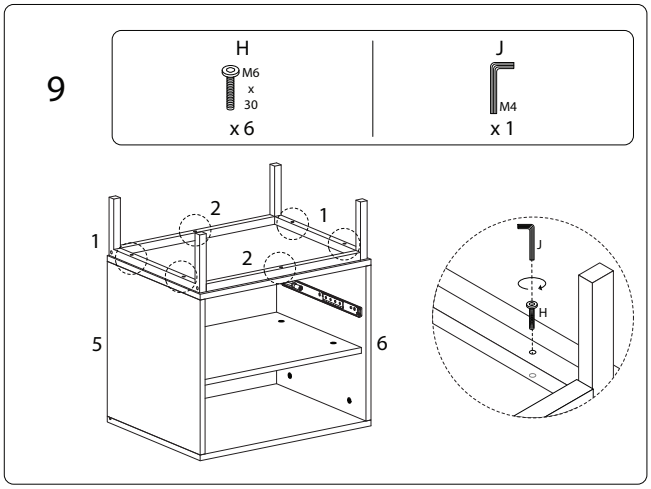

10

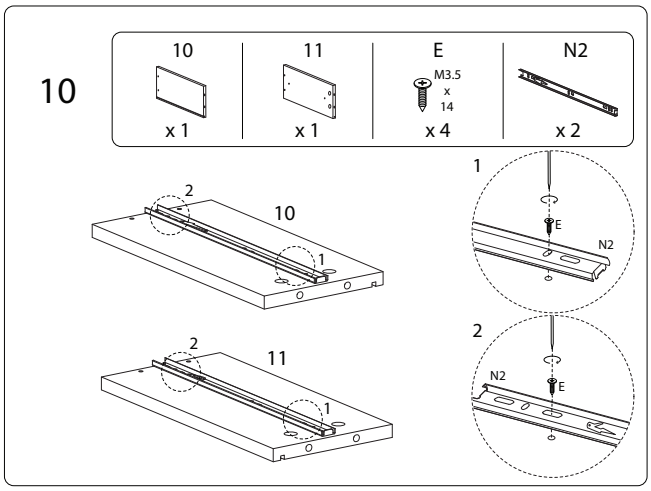

11

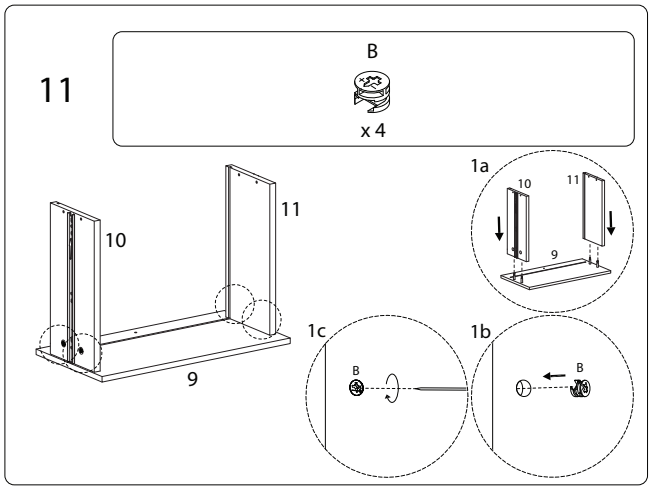

12

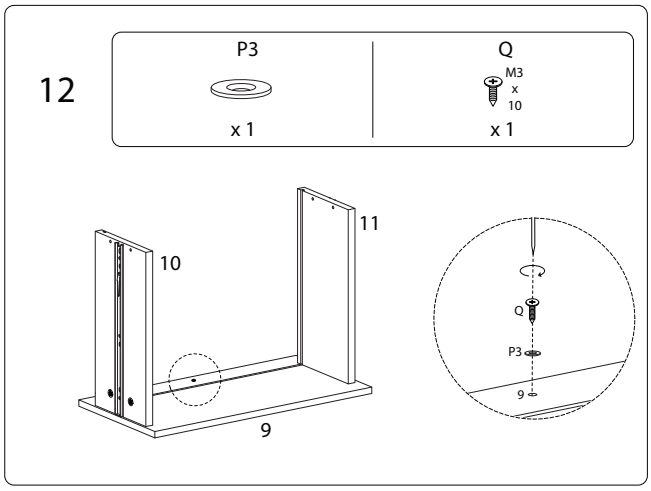

13

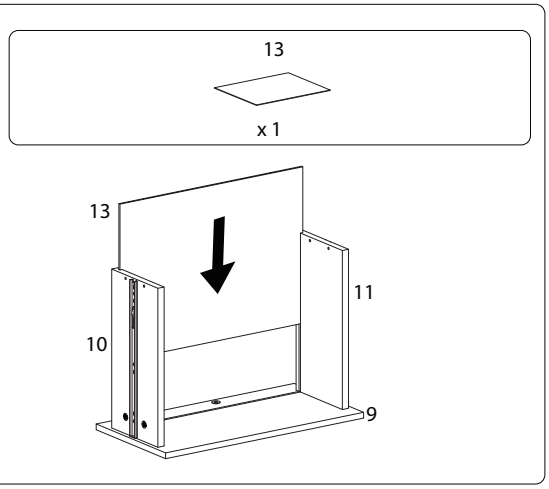
13
x 1
13
11
10
9

14

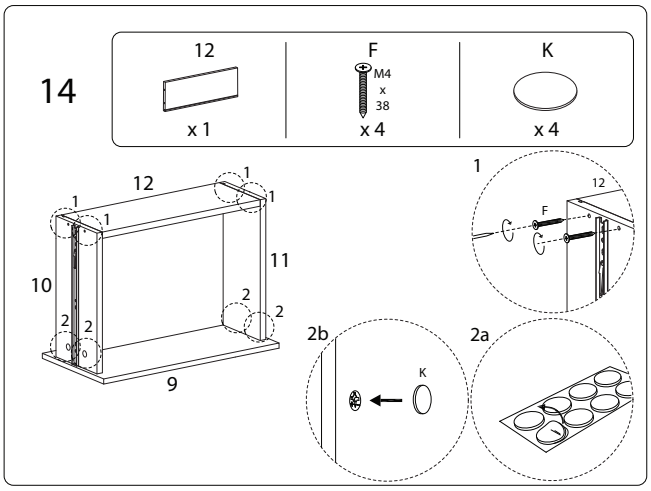
12
x 1
F
M4
x
38
x 4
K
x 4
12
1
1
1
1
10
11
2
2
2
2
9
1
12
F
2b
K
2a

15

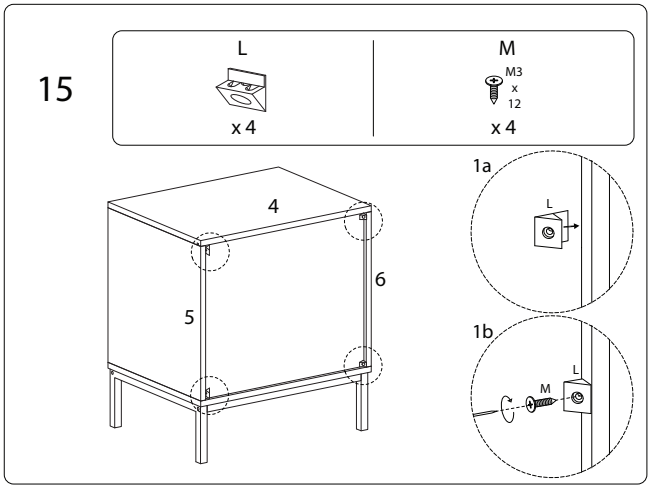
L
x 4
M
M3
x
12
x 4
4
6
5
1a
L
1b
L
M

16

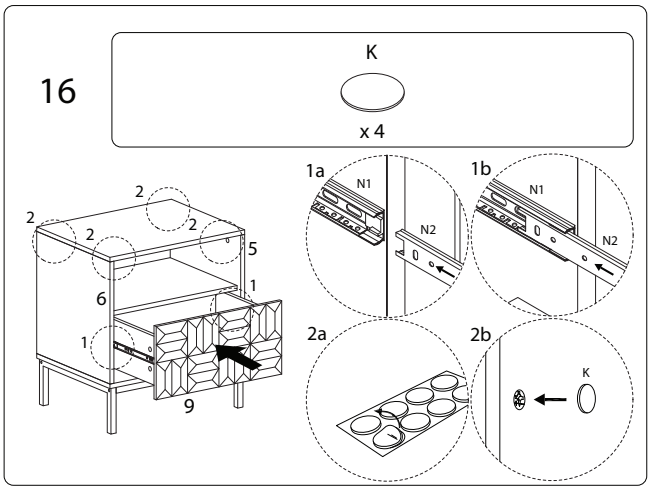
K
x 4
2
2
2
2
5
1
6
1
9
1a
N1
N2
1b
N1
N2
2a
2b
K