ADELAIDE

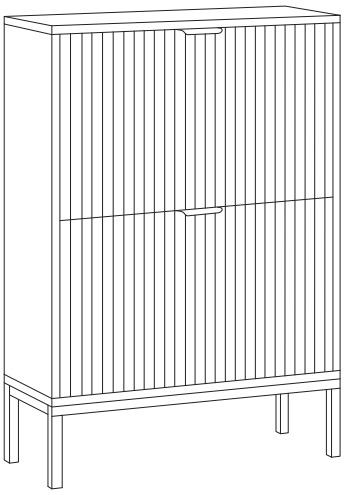

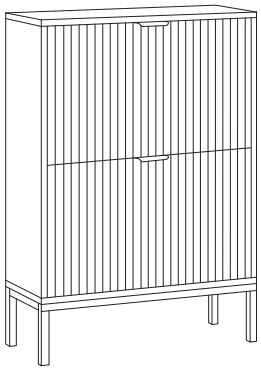

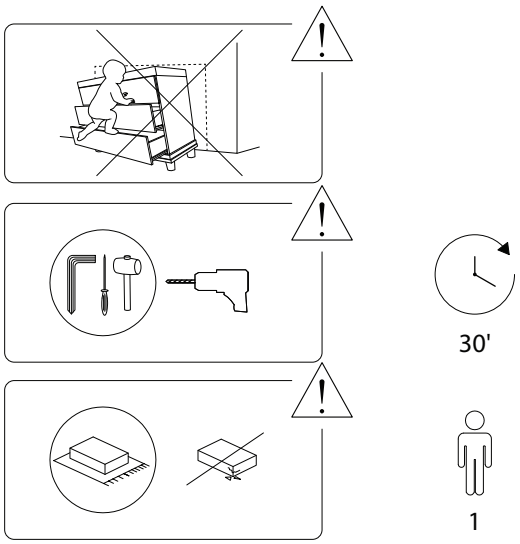
30'
1

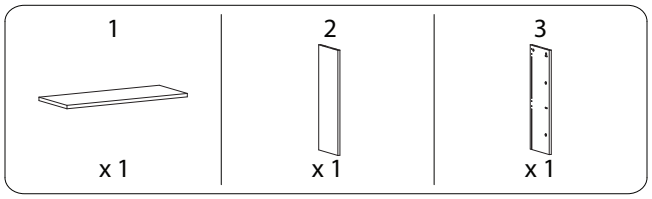
1
x 1
2
x 1
3
x 1

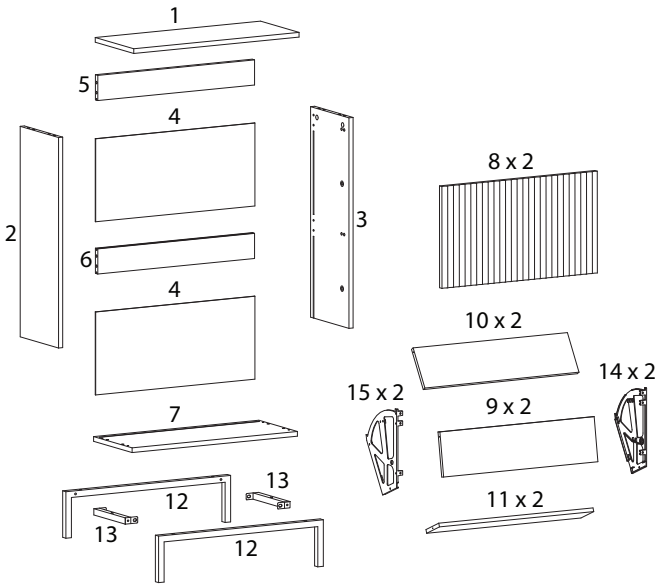
1
5
4
2
6
4
3
8 x 2
10 x 2
14 x 2
15 x 2
9 x 2
7
13
12
13
12
11 x 2

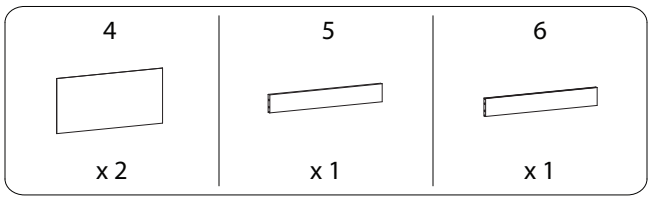
4
x 2
5
x 1
6
x 1

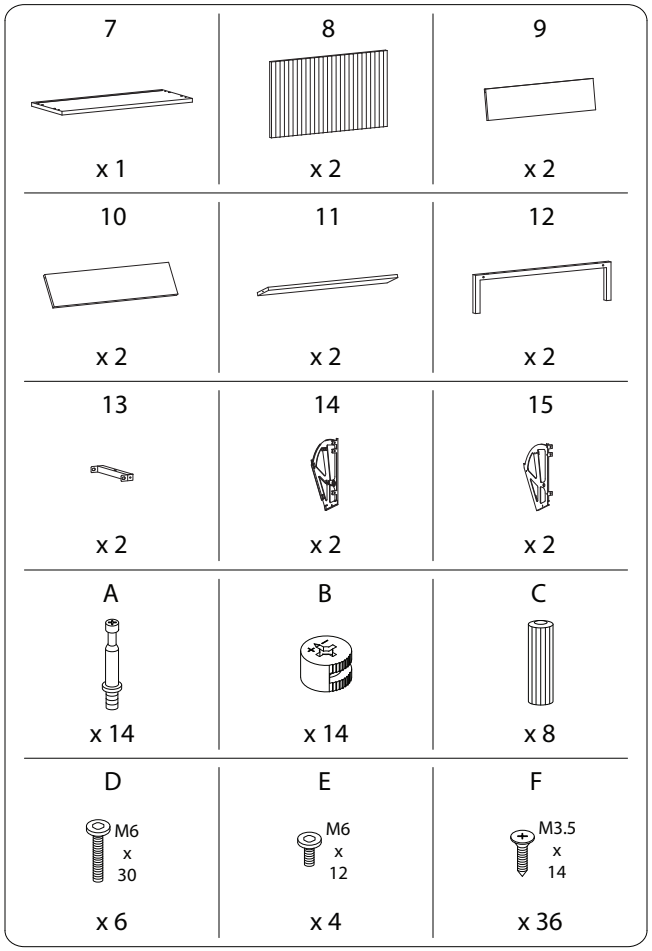
7
x 1
8
x 2
9
x 2
10
x 2
11
x 2
12
x 2
13
x 2
14
x 2
15
x 2
A
x 14
B
x 14
C
x 8
D
M6
x
30
x 6
E
M6
x
12
x 4
F
M3.5
x
14
x 36

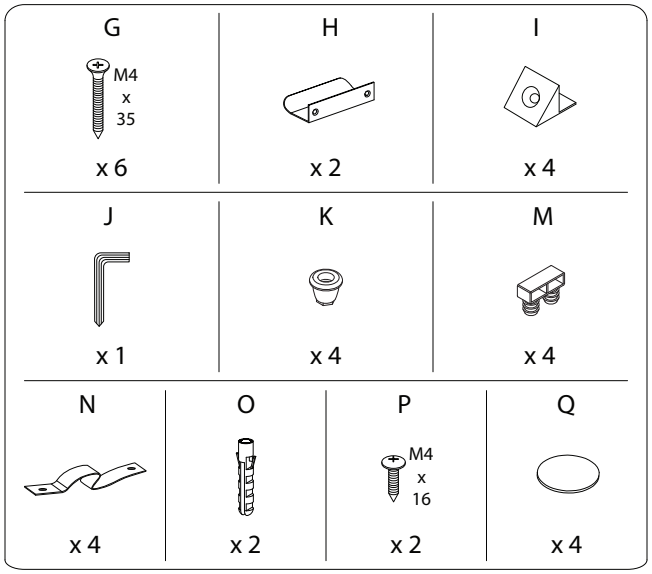
G
M4 x 35
x 6
H
x 2
I
x 4
J
x 1
K
x 4
M
x 4
N
x 4
O
x 2
P
M4 x 16
x 2
Q
x 4

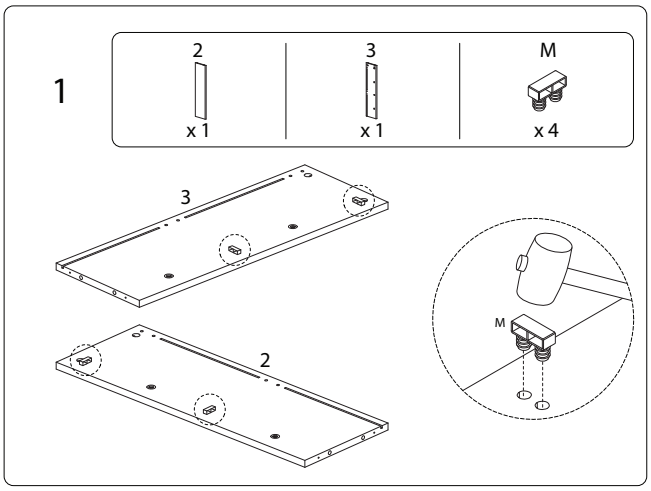
1
2
x 1
3
x 1
M
x 4
3
2
M

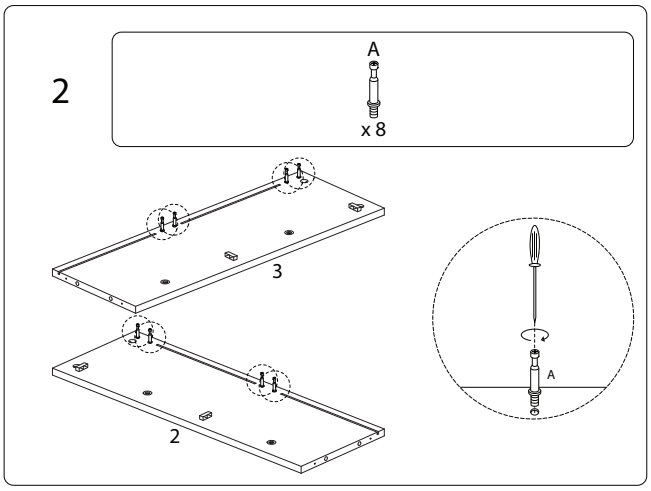
2
A
x 8
3
2
A

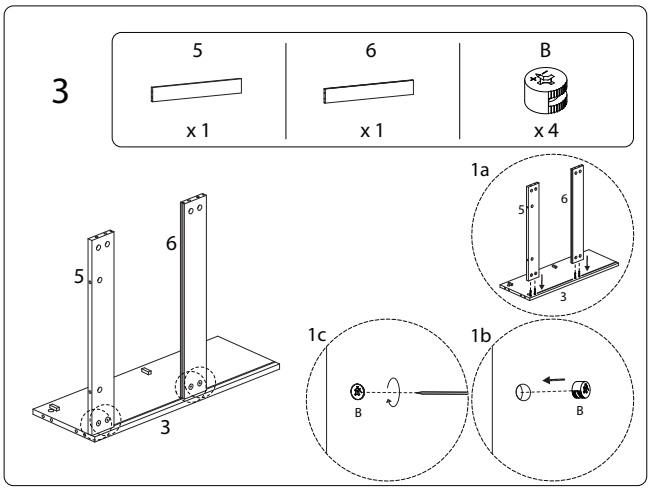
3
5
x 1
6
x 1
B
x 4
1a
5
6
3
1c
1b
B
B
5
6
3

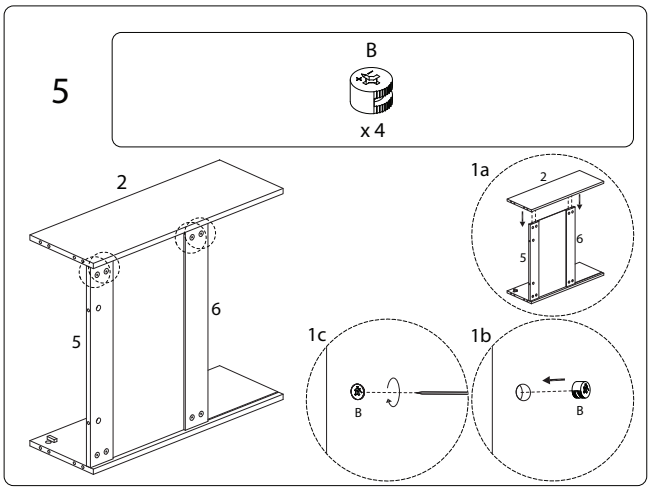
5
B
x 4
2
1a
2
5
6
6
5
1c
1b
B
B

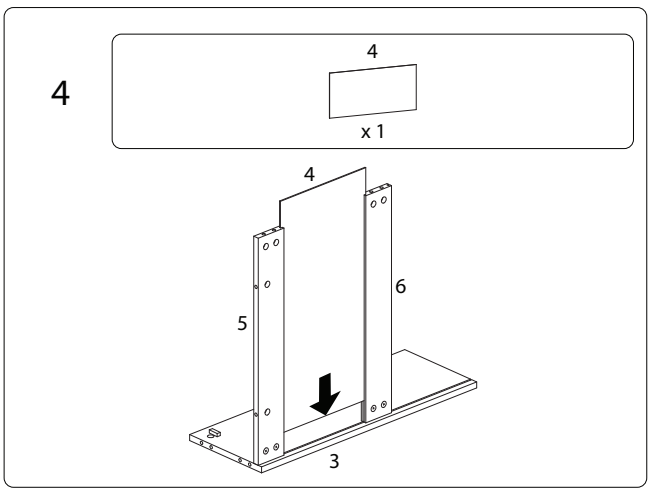
4
4
x 1
4
5
6
3

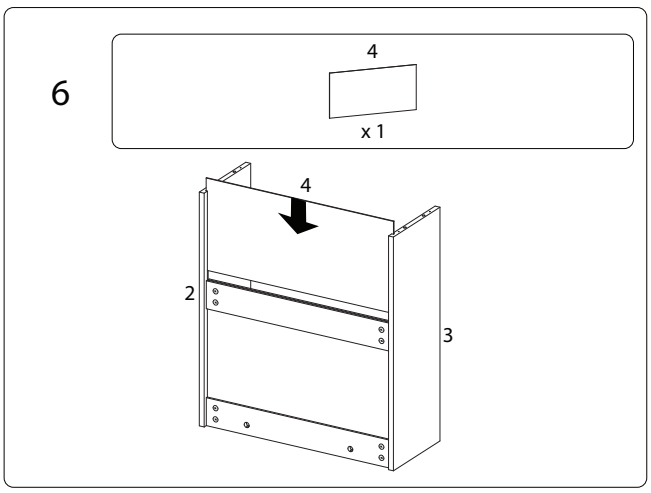
6
4
x 1
4
2
3

7

1	A
x 1	x 6

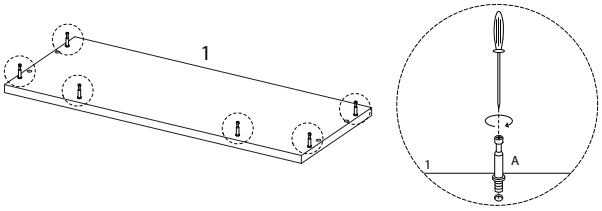

8

C
x 8

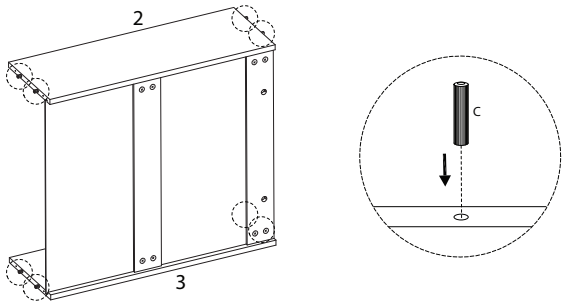

9

B
x 6

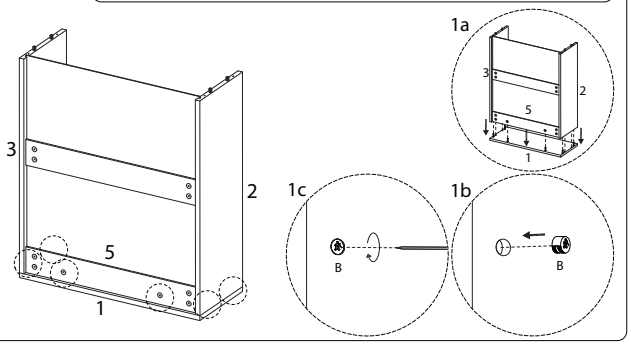

10

7	G
x 1	M4 x 35 x 4

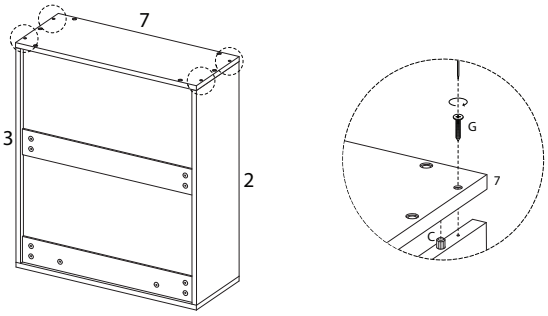

11

12	13	E	J
x 2	x 2	M6 x 12 x 4	x 1

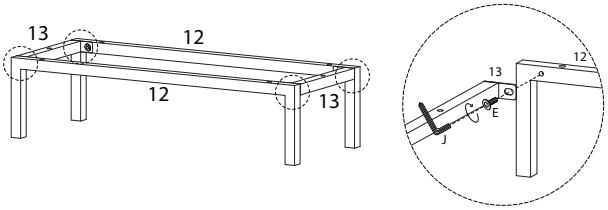

13 x 2

8	14	15	F
x 1	x 1	x 1	M3.5 x 14 x 6

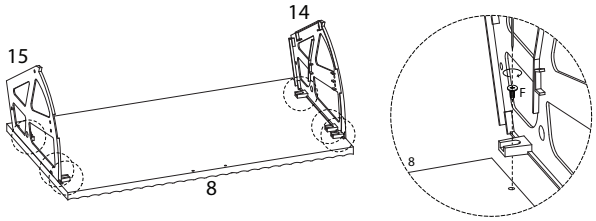

12

D	J
M6 x 30 x 6	x 1

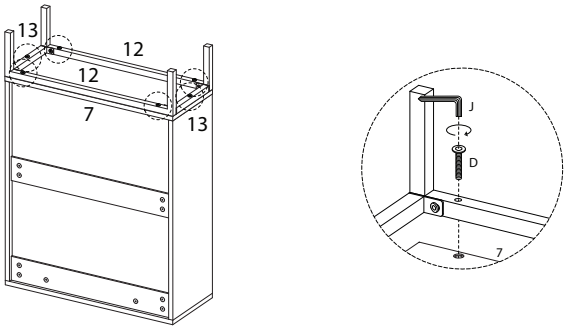

14 x 2

F	H
M3.5 x 14 x 2	x 1

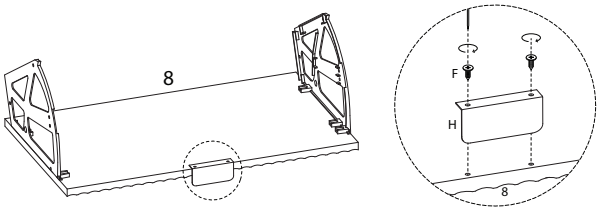

15 x 2

11	F
x 1	M3.5 x 14 x 2

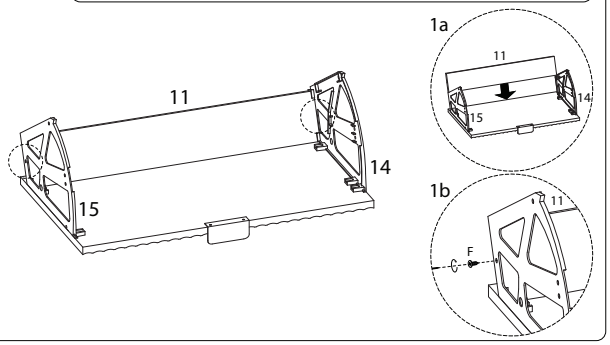

16 x 2

10	F
x 1	M3.5 x 14 x 2

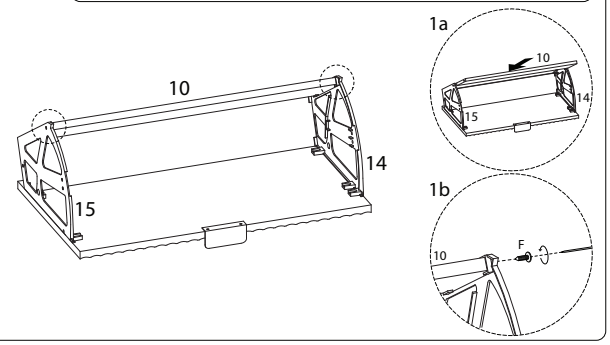

17

F	K
M3.5 x 14 x 4	x 4

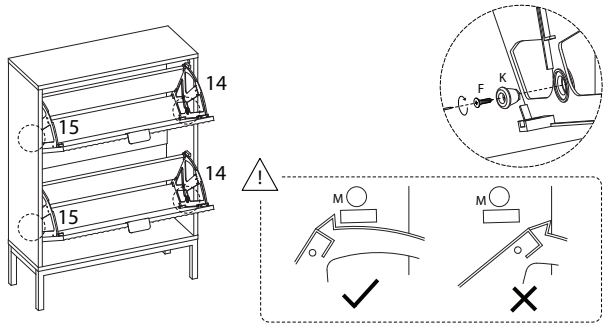

18

9	F
x 2	M3.5 x 14 x 4

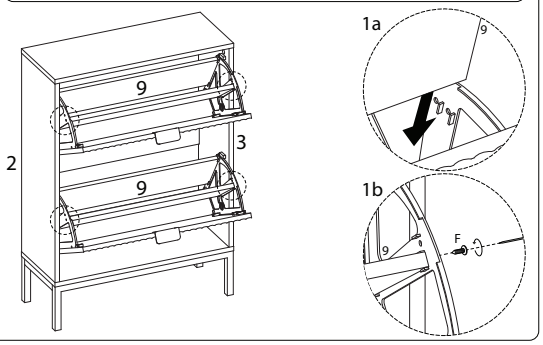

19

F	I
M3.5 x 14 x 4	x 4

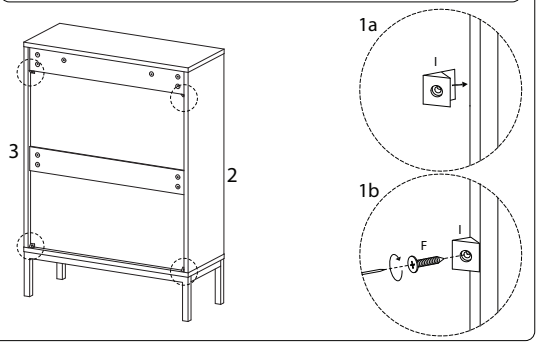

21

G	O
M4 x 35 x 2	x 2

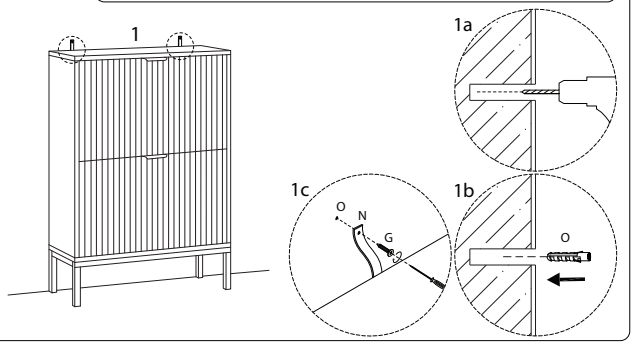

20

N	P
x 2	M4 x 16 x 2

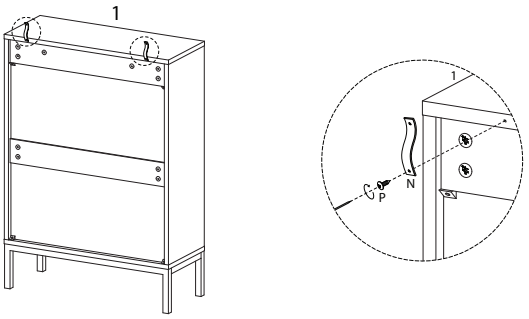

22
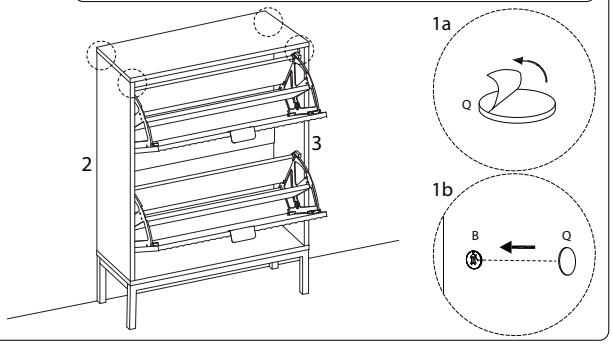
Q
x 4