COSTELLO

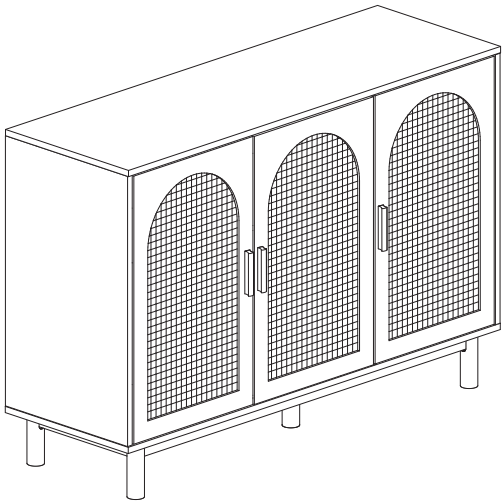

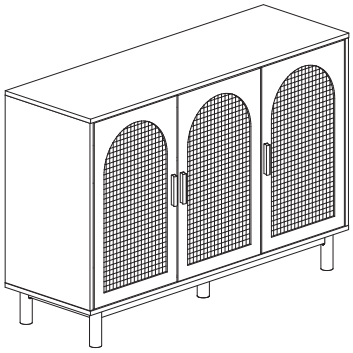

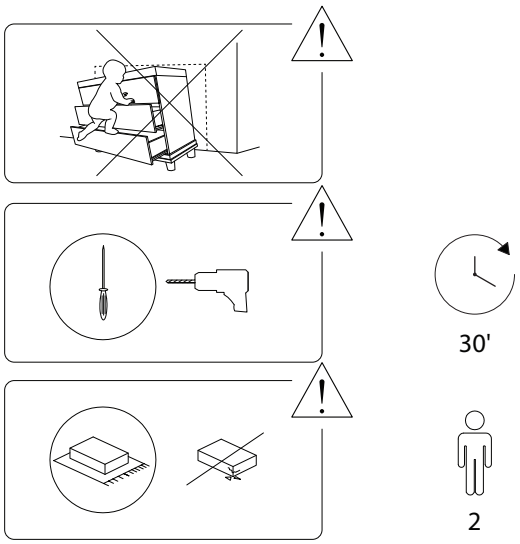
30'
2

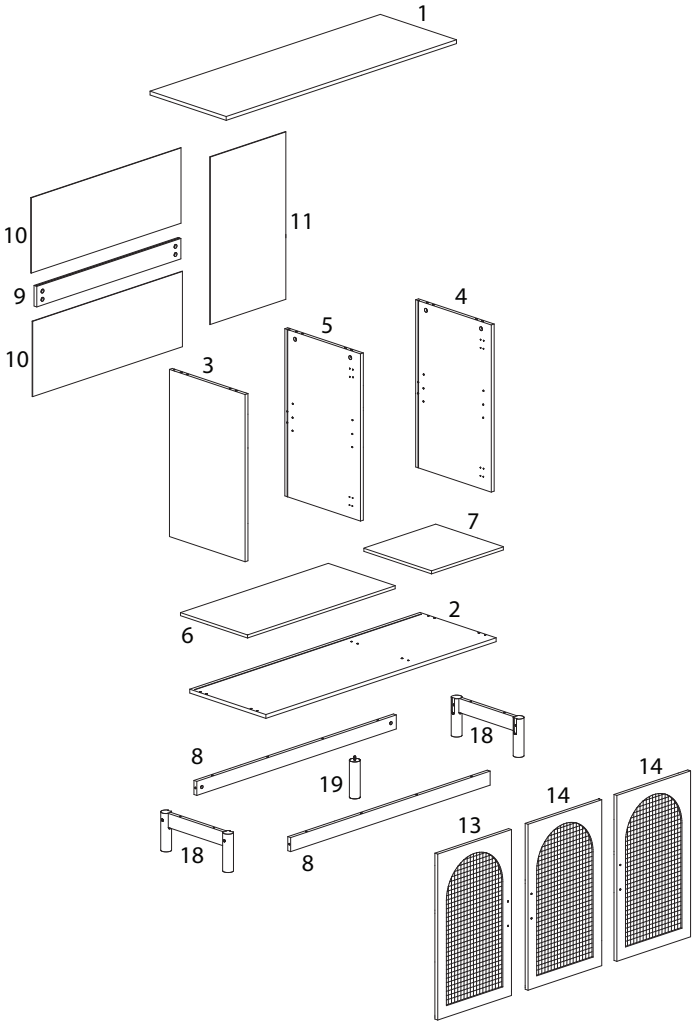
1
10
11
9
10
5
4
3
7
6
2
18
8
19
14
14
13
18
8

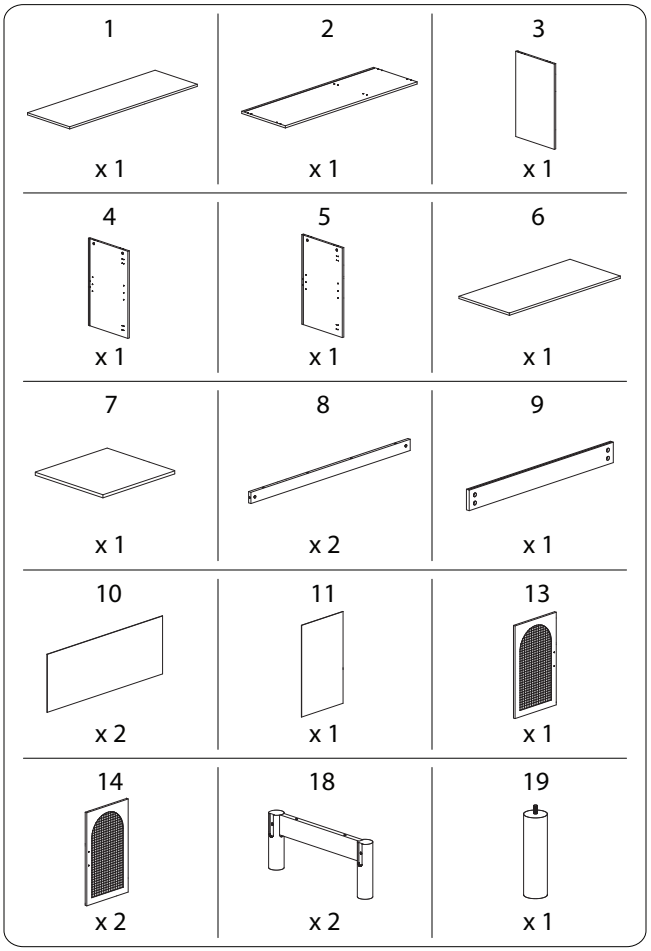
1
x 1
2
x 1
3
x 1
4
x 1
5
x 1
6
x 1
7
x 1
8
x 2
9
x 1
10
x 2
11
x 1
13
x 1
14
x 2
18
x 2
19
x 1

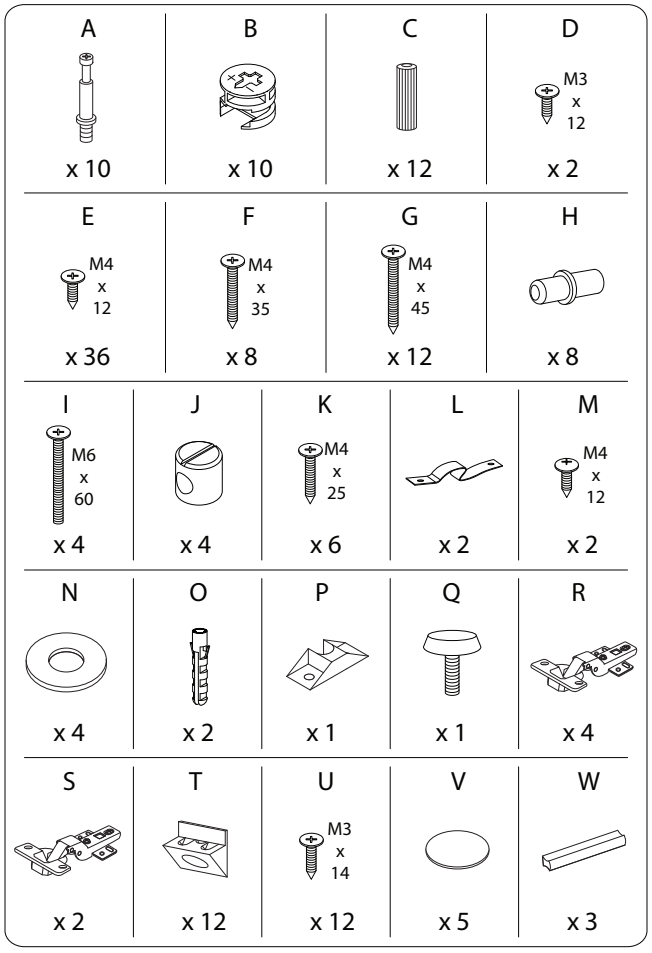
A
x 10
B
x 10
C
x 12
D
M3 x 12
x 2
E
M4 x 12
x 36
F
M4 x 35
x 8
G
M4 x 45
x 12
H
x 8
I
M6 x 60
x 4
J
x 4
K
M4 x 25
x 6
L
x 2
M
M4 x 12
x 2
N
x 4
O
x 2
P
x 1
Q
x 1
R
x 4
S
x 2
T
x 12
U
M3 x 14
x 12
V
x 5
W
x 3

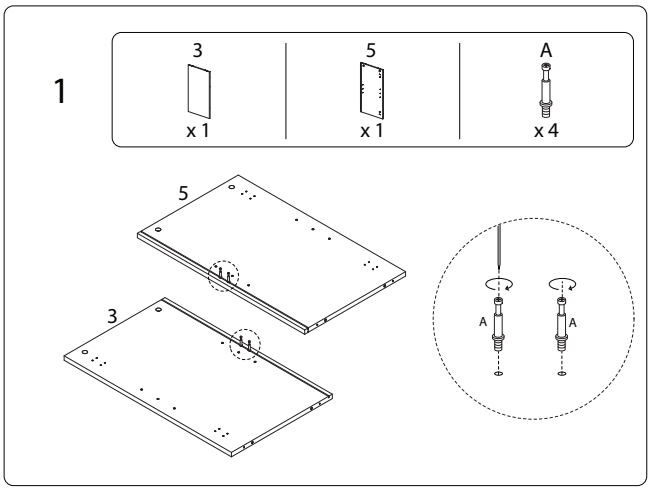
1
3
x 1
5
x 1
A
x 4
5
3
A
A

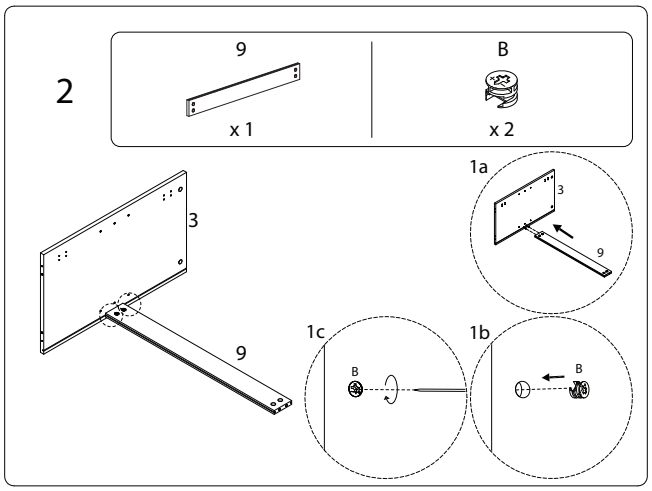
2
9
x 1
B
x 2
1a
3
9
3
9
1c
1b
B
B

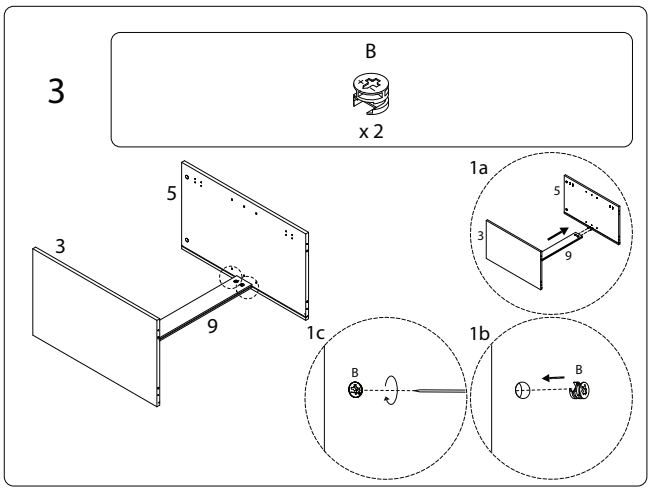
3
B
x 2
5
3
9
1a
5
3
9
1c
1b
B
B

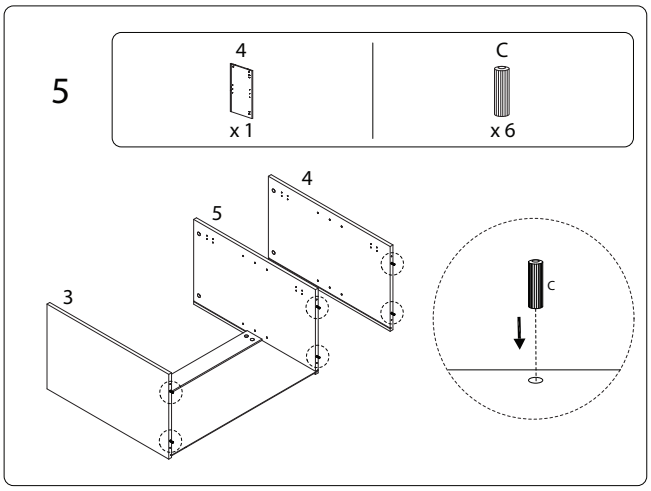
5
4
x 1
C
x 6
4
5
3
C

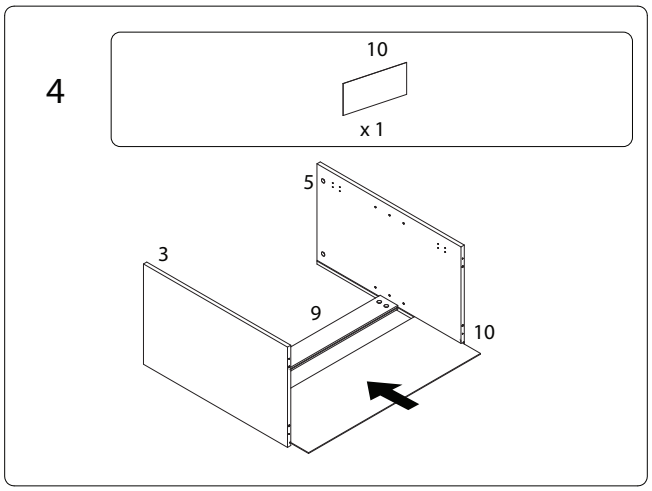
4
10
x 1
5
3
9
10

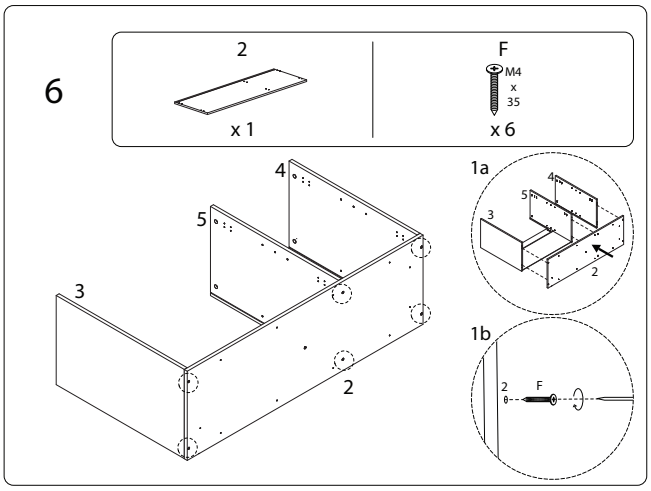
6
2
x 1
F
M4 x 35
x 6
4
5
3
2
1a
4
5
3
2
1b
2
F

7

8	18	I	J
x 2	x 2	M6 x 60 x 4	x 4

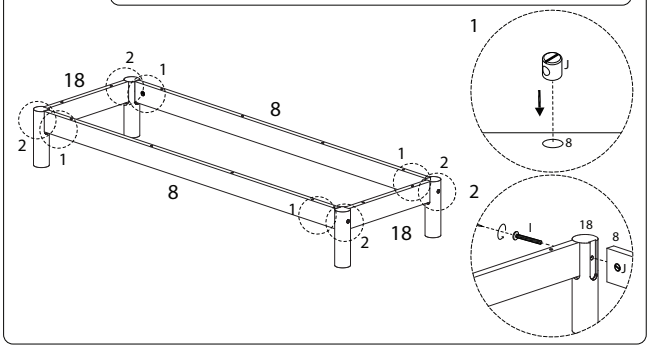

8

G
M4 x 45 x 12

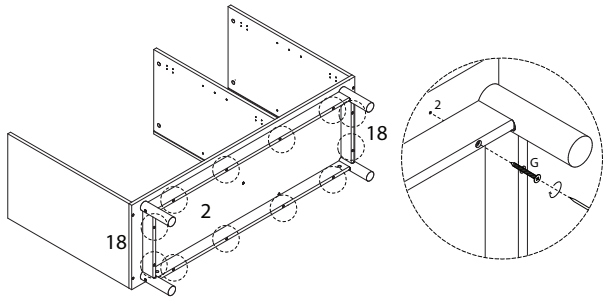

9

19	Q
x 1	x 1

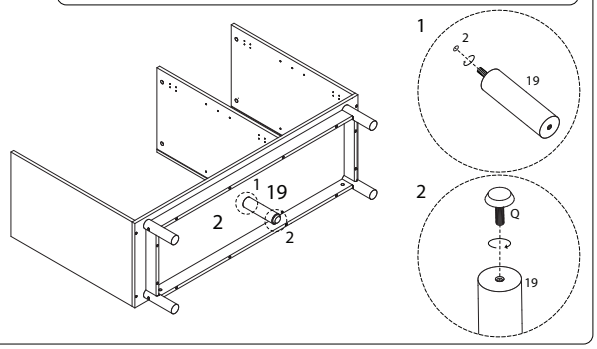

10

V
x 5

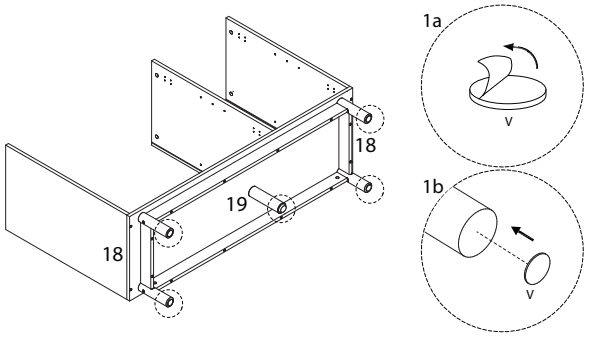

11

10	11
x 1	x 1

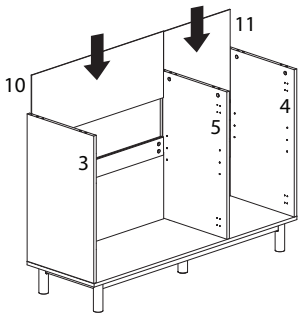

12

1	A	C	D	P
x 1	x 6	x 6	M3 x 12 x 2	x 1

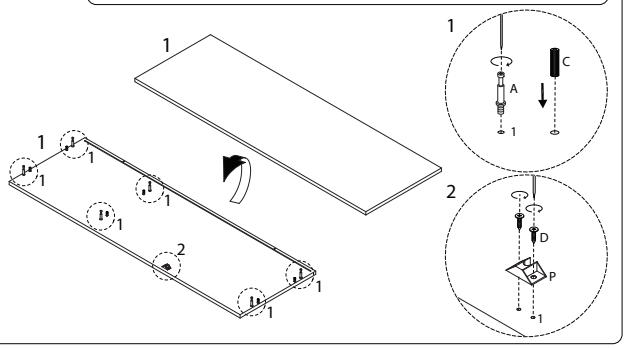

13

B
x 6

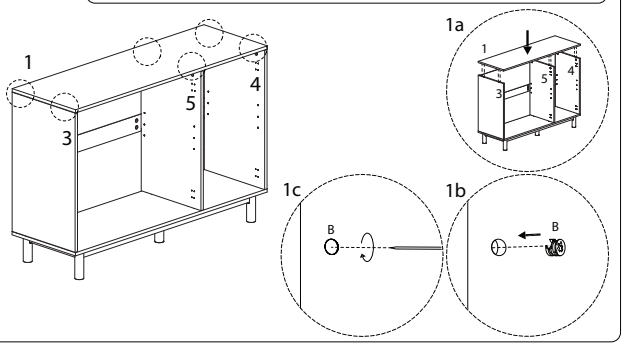

14

T	U
x 12	M3 x 14 x 12

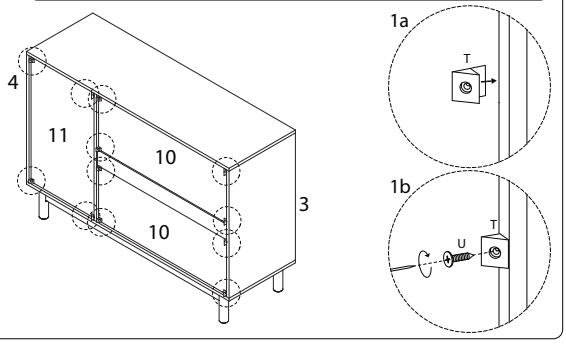

15

H
x 8

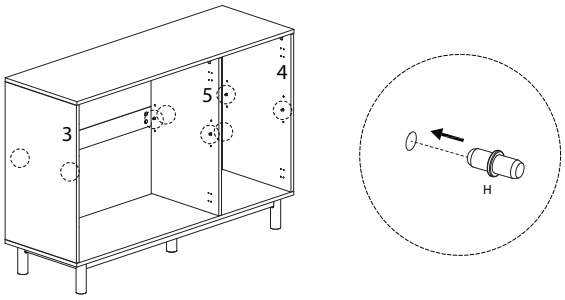

16

6	7
x 1	x 1

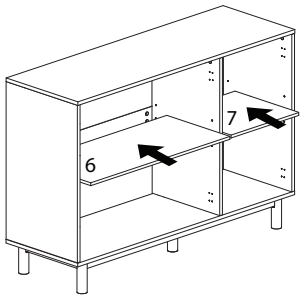

17

L	M	N
x 2	M4 x 12 x 2	x 2

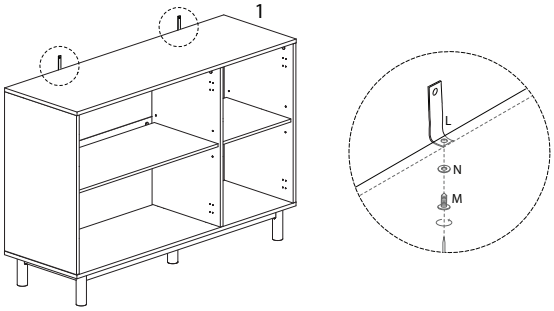

18

13	14	E	R
x 1	x 1	M4 x 12 x 8	x 4

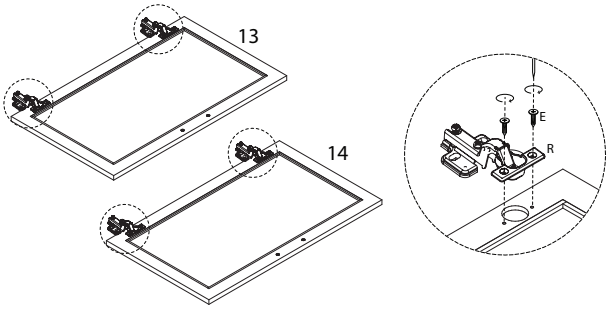

19

14	E	S
x 1	M4 x 12 x 4	x 2

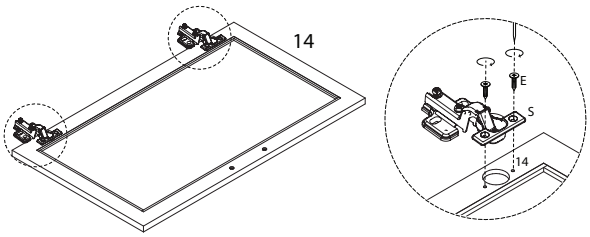

20

K	W
M4 x 25 x 6	x 3

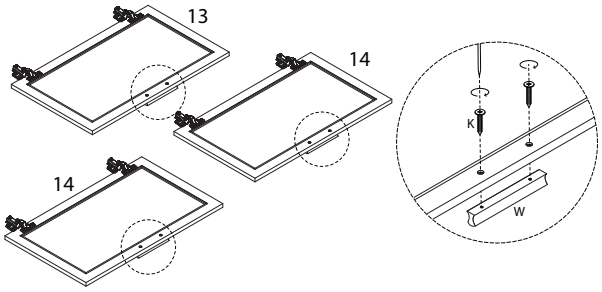

21

E
M4 x 12 x 8

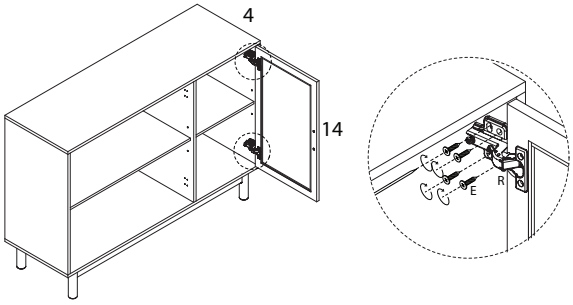

22

E
M4 x 12 x 16

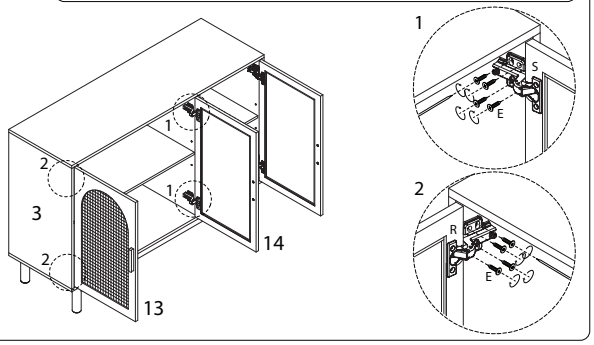

23

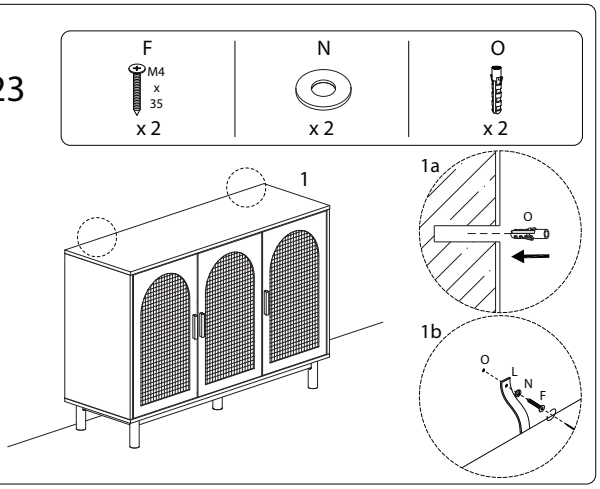

24

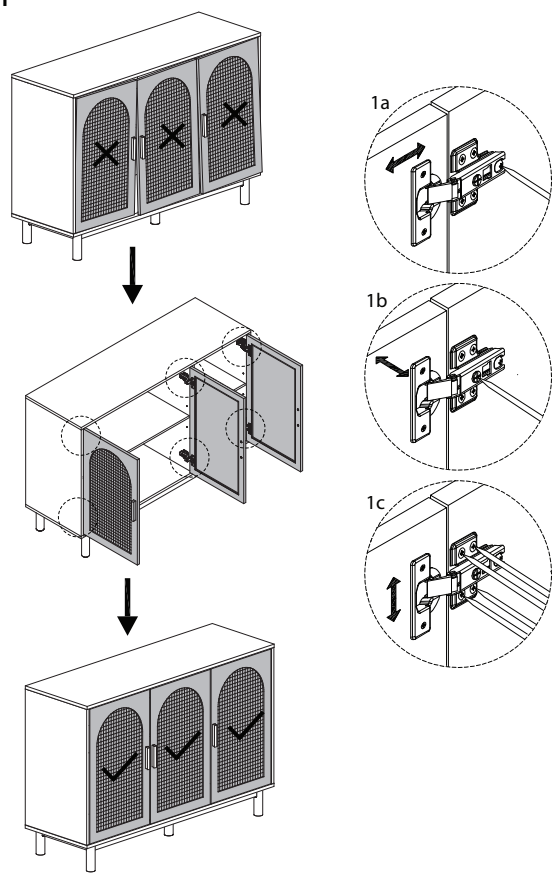

1658/COSTELLO/290126/