BENDIGO

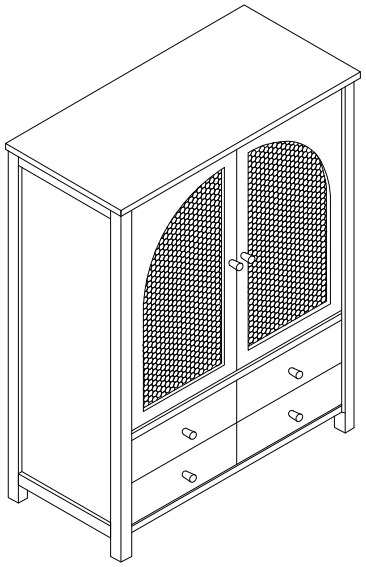

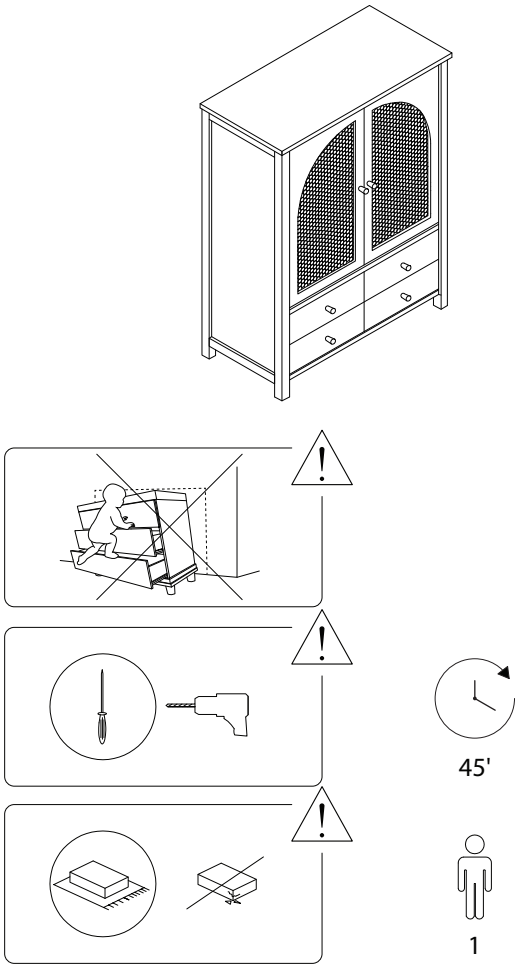
45'
1

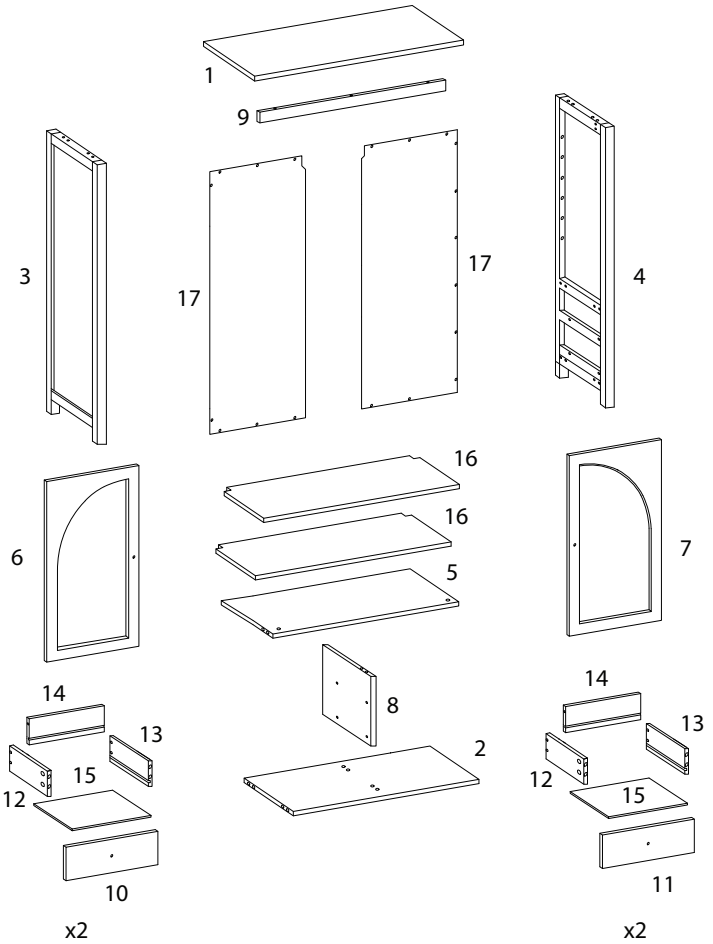
1
9
3
17
17
4
16
16
6
5
7
8
14
13
15
12
2
10
x2
14
13
12
15
11
x2

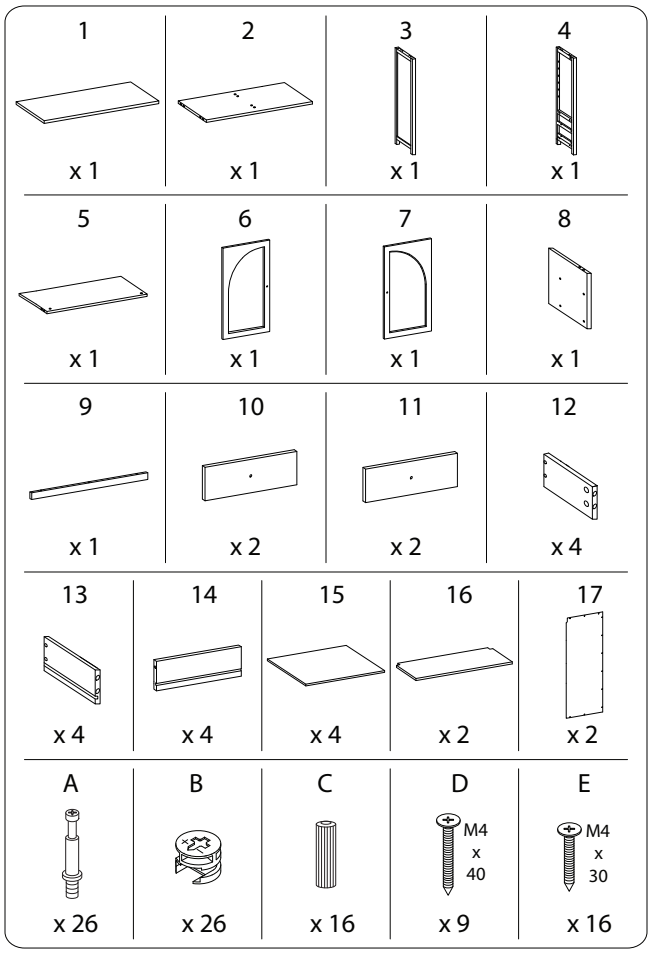
1 x 1
2 x 1
3 x 1
4 x 1
5 x 1
6 x 1
7 x 1
8 x 1
9 x 1
10 x 2
11 x 2
12 x 4
13 x 4
14 x 4
15 x 4
16 x 2
17 x 2
A x 26
B x 26
C x 16
D M4 x 40 x 9
E M4 x 30 x 16

F1	F2	G1	G2	H1
x 1	M3 x 16 x 2	x 2	M3 x 10 x 1	x 2
H2	**J**	**K**	**L**	**M**
x 2	M3 x 12 x 16	x 6	M4 x 18 x 6	x 4
N	**O**	**P**	**Q**	**R**
x 4	x 4	x 4	M4 x 12 x 32	x 2
S	**T**	**U**	**V**	**W**
M2.5 x 10 x 28	x 8	x 1	M4 x 40 x 1	x 1
X	**Y**	**Z**	**a**	
M4 x 12 x 1	x 1	x 4	x 4	

1

9	J	R
x 1	M3 x 12 x 4	x 2

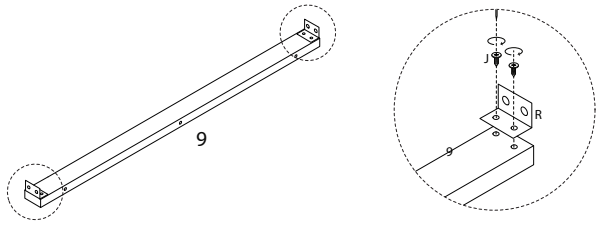

2

1	F1	F2	W	X
x 1	x 1	M3 x 16 x 2	x 1	M4 x 12 x 1

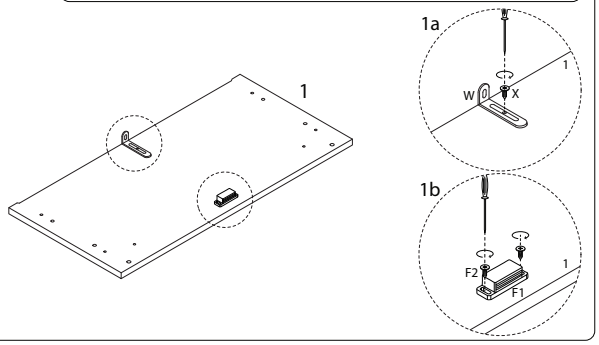

3

6	7	G1	G2	K	L
x 1	x 1	x 2	M3 x 10 x 2	x 2	M4 x 18 x 2

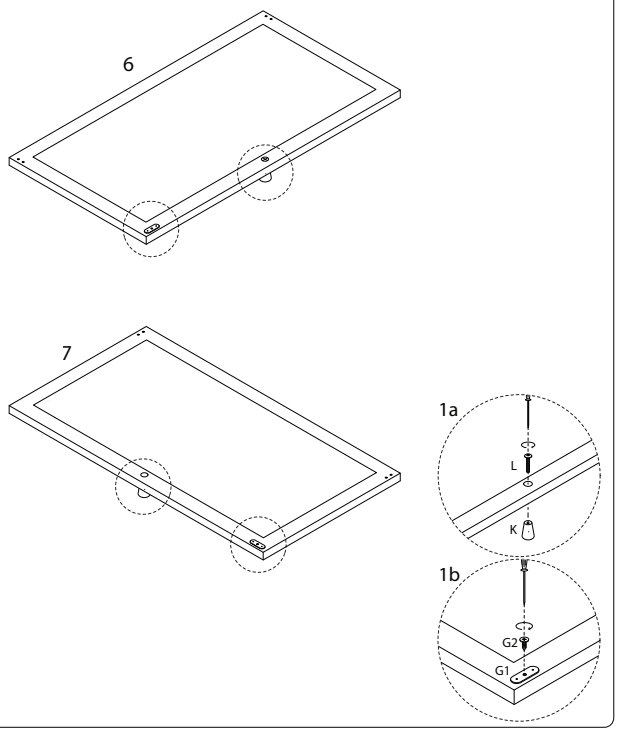

4

3	4	A	M	N	Q
x 1	x 1	x 8	x 2	x 2	M4 x 12 x 8

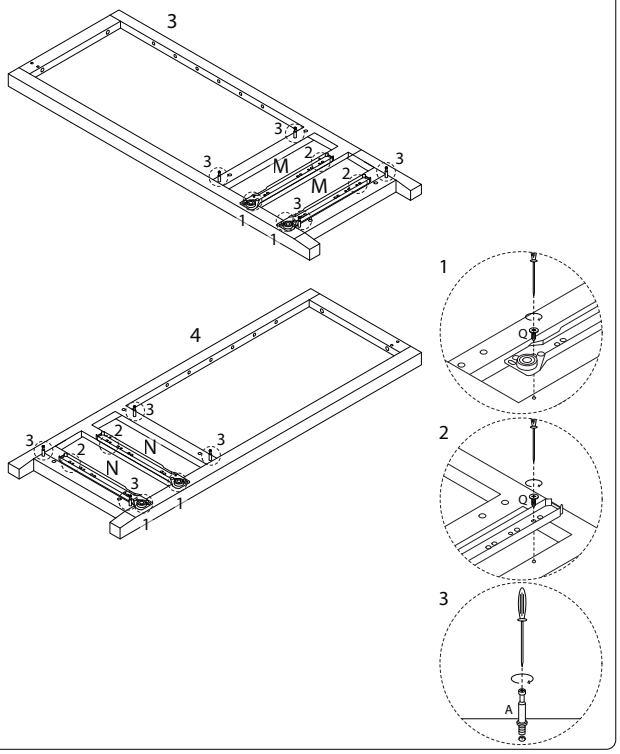

5

8	N	M	Q
x 1	x 2	x 2	M4 x 12 x 8

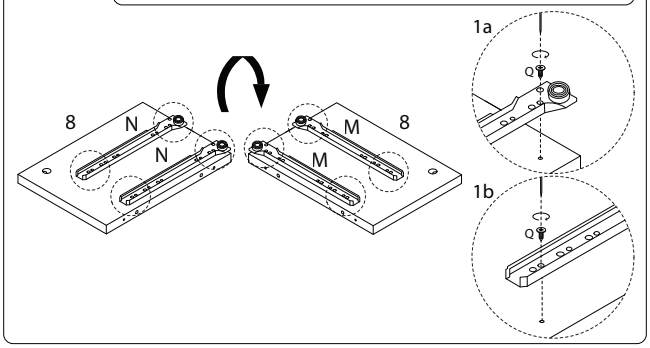

6

C
x 4

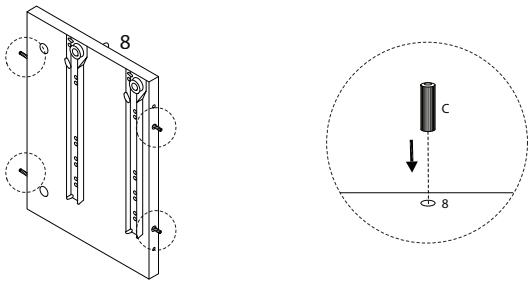

7

5	A
x 1	x 2

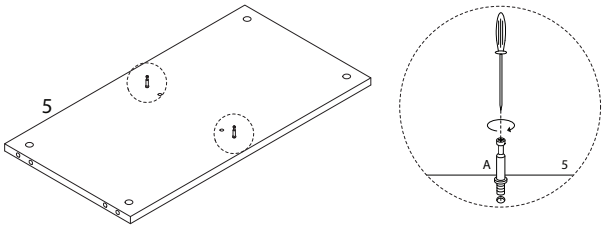

8

B
x 2

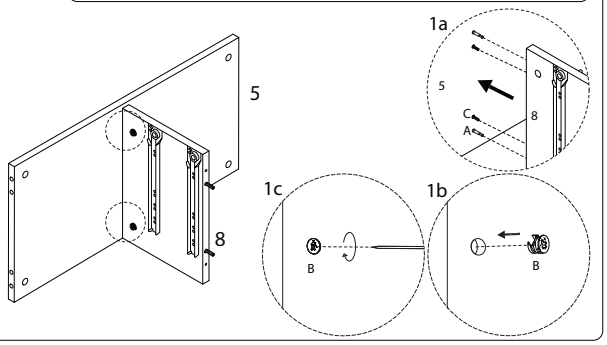

9

2	D
x 1	M4 x 40 x 2

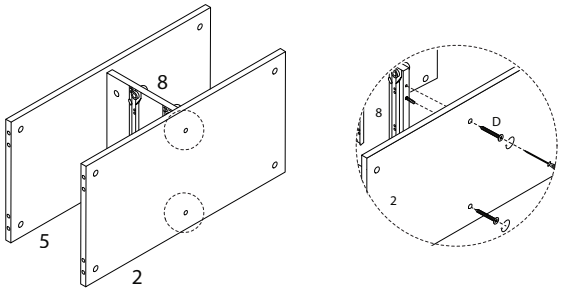

10

C
x 8

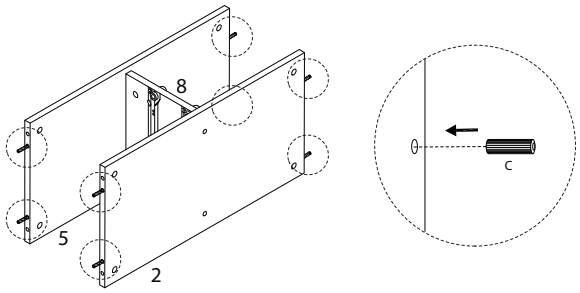

11

B
x 4

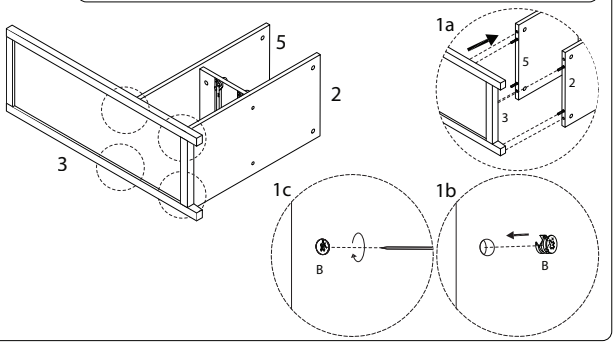

12

B
x 4

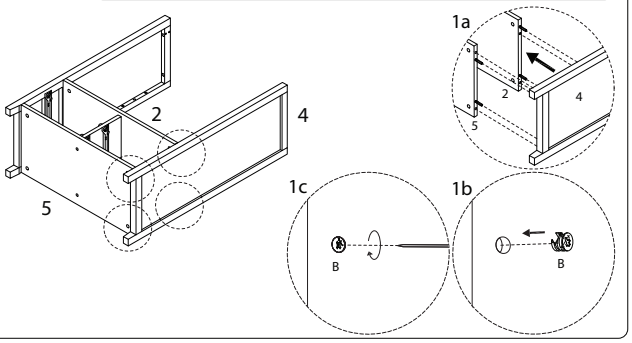

13

J
M3 x 12
x 4

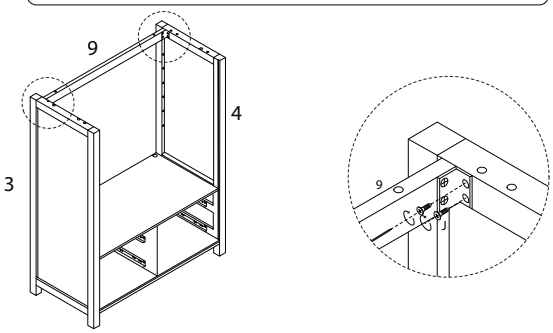

14

C
x 4

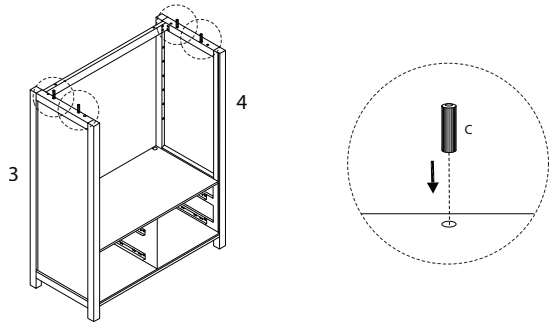

15

D
M4 x 40
x 7

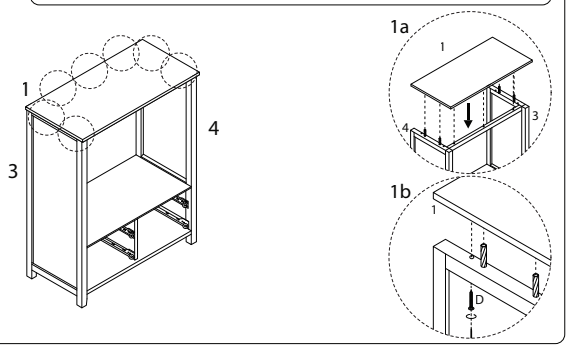

16

Z
x 4

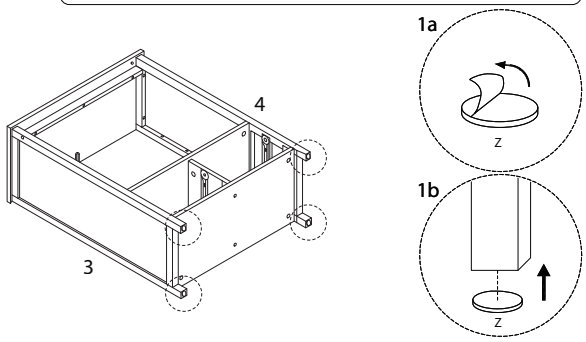

17

17	S	Y
x 2	M2.5 x 10 x 28	x 1

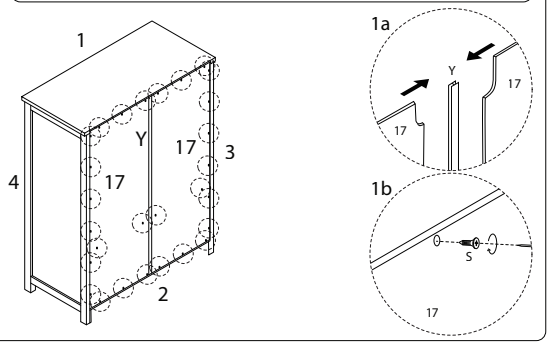

18

H1	H2	a
x 2	x 2	x 4

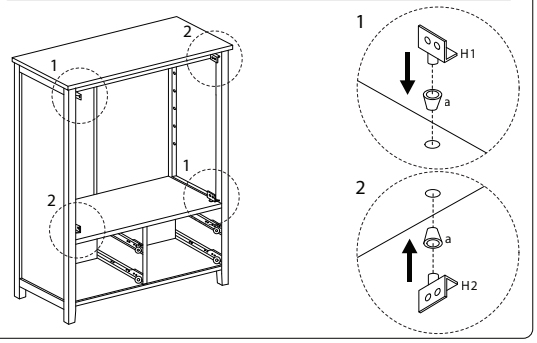

19

J
M3 x 12
x 8

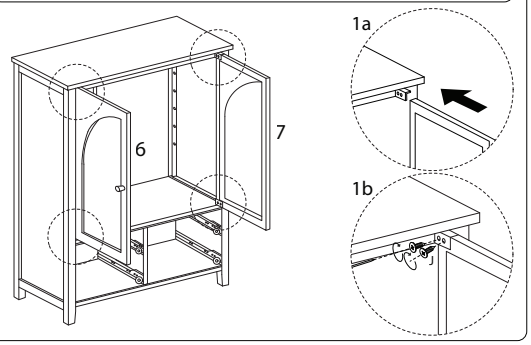

20

U	V
x 1	M4 x 40 x 1

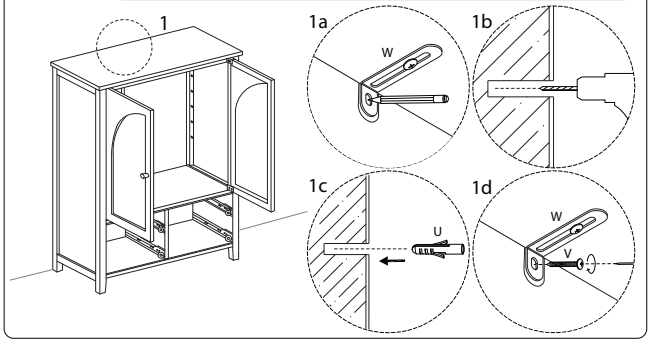

21

T
x 8

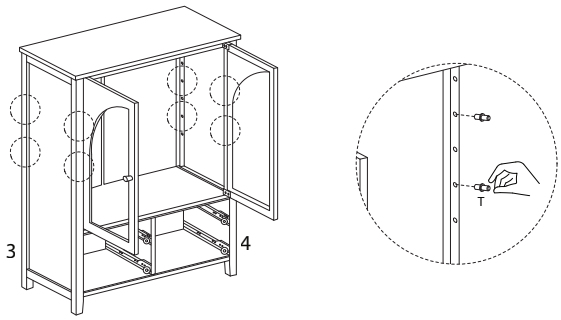

22

16
x 2

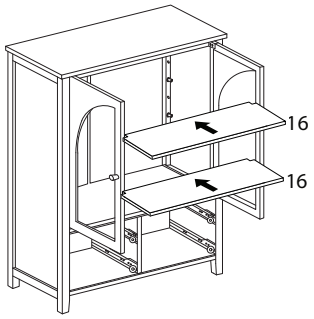

23 x 4

12	13	14	E
x 1	x 1	x 1	M4 x 30 x 4

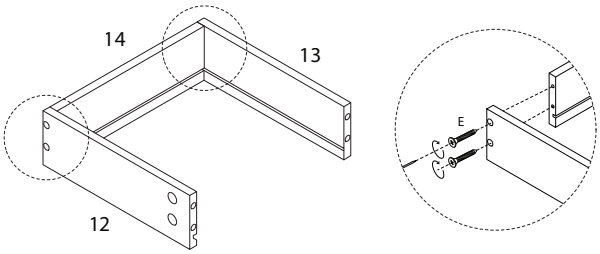

24 x 4

15
x 1

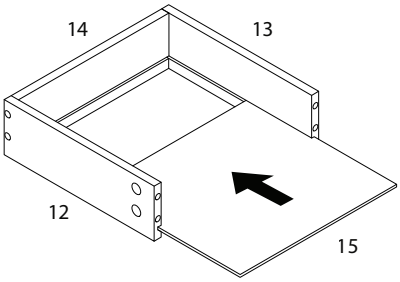

25 x 2

10	11	A	K	L
x 1	x 1	x 8	x 2	M4 x 18 x 2

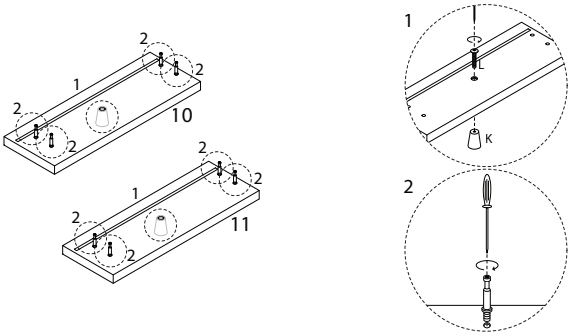

26 x 2

B
x 8

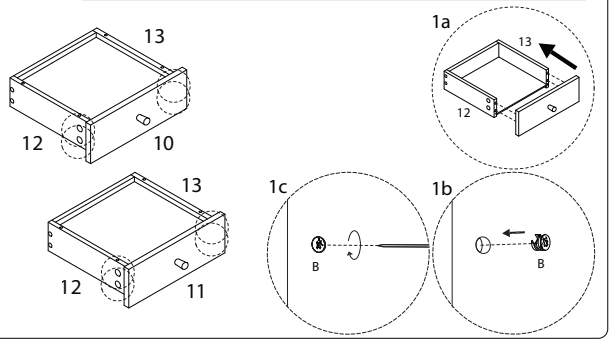

27 x 2

O	P	Q
x 2	x 2	M4 x 12 x 8

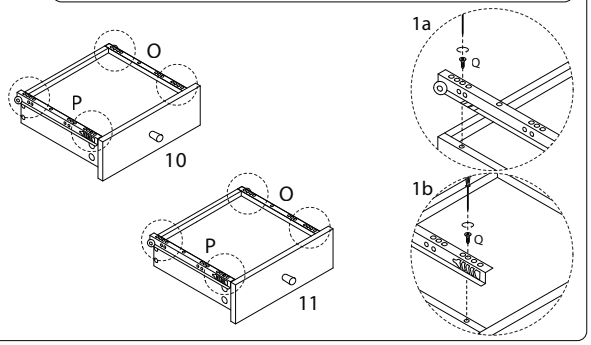
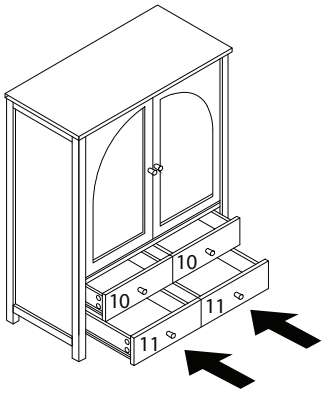
28