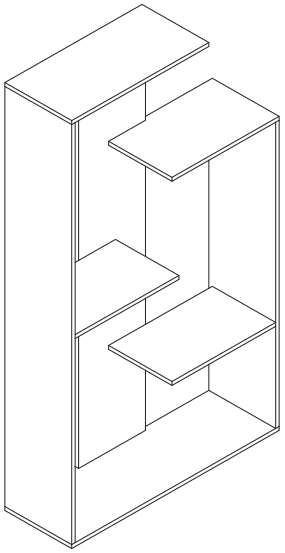
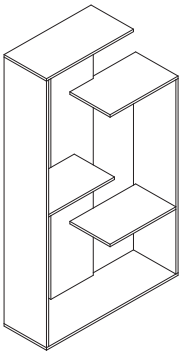
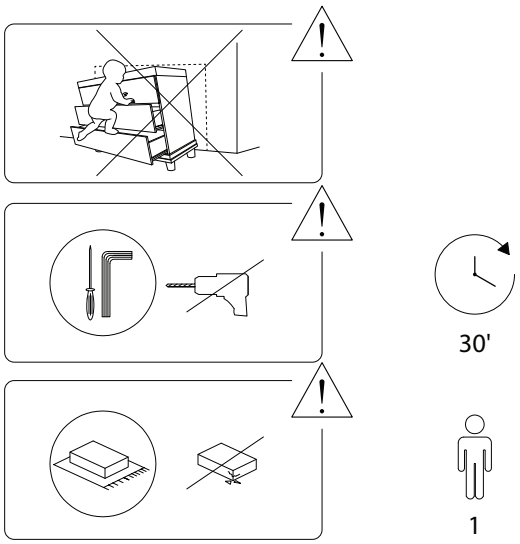
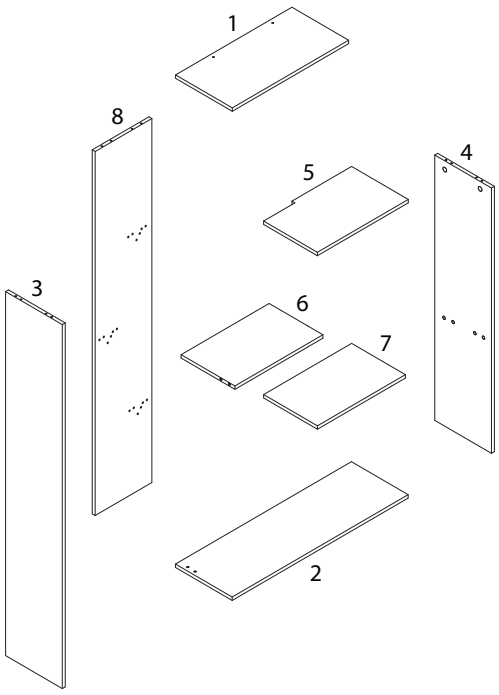
KAHNTAH



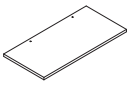
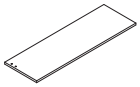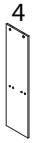
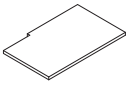
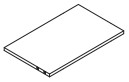
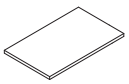
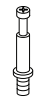
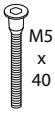
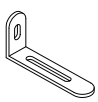




233S/KAHNTAH/201025/

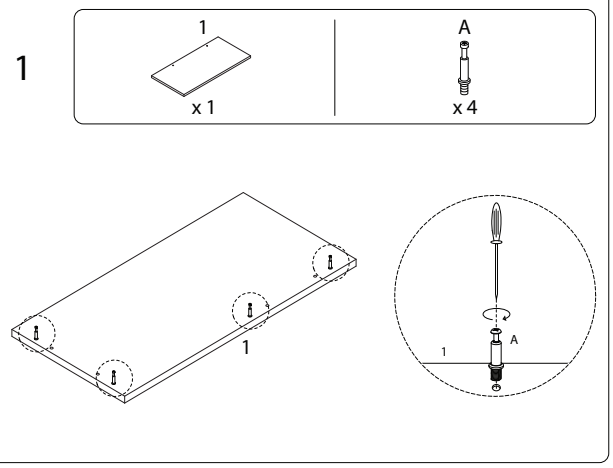


233S/KAHNTAH/201025/

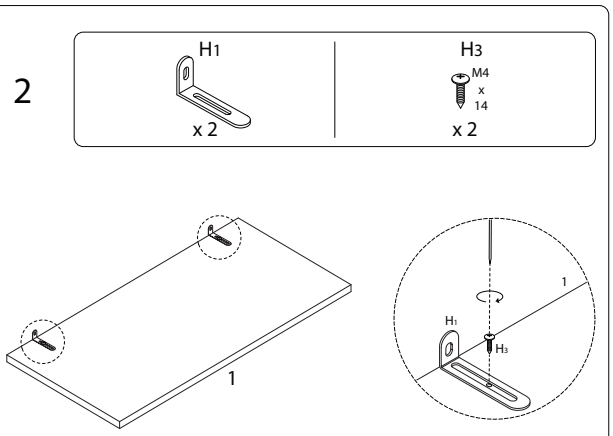
1  x 1	2  x 1	3  x 1	4  x 1
5  x 1	6  x 1	7  x 1	8  x 1
A  x 10	B  x 10	C  x 22	D  x 12
E  x 3	F  x 18	G  x 4	H_1  x 2
H_2  x 2	H_3  x 2	H_4  x 2	I  x 1	J  x 6

233S/KAHNTAH/201025/

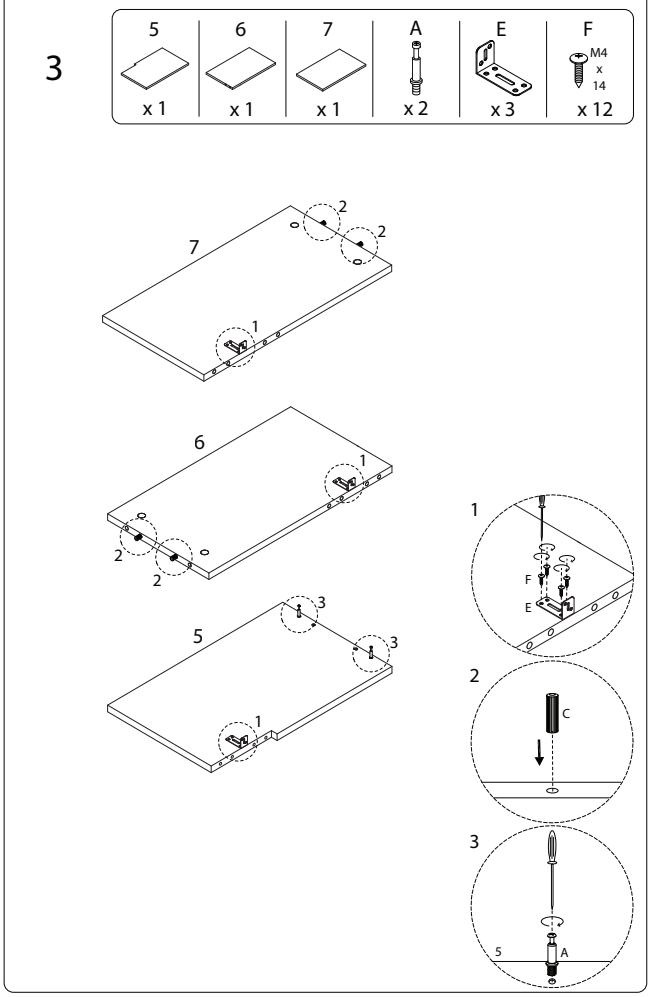
1


1
x 1
A
x 4
1
1
A

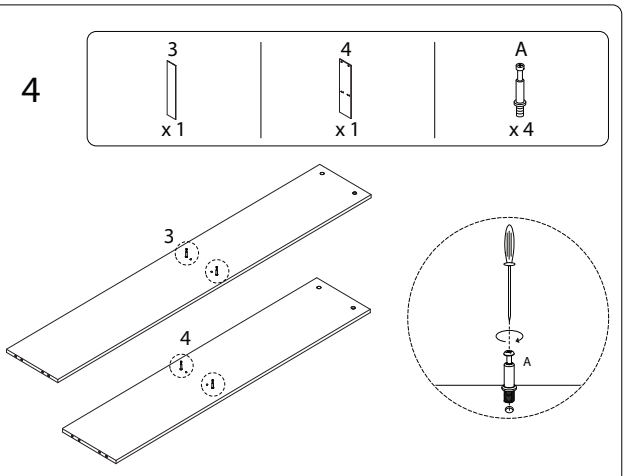
2


H1
x 2
H3
M4 x 14
x 2
1
1
H1
H3

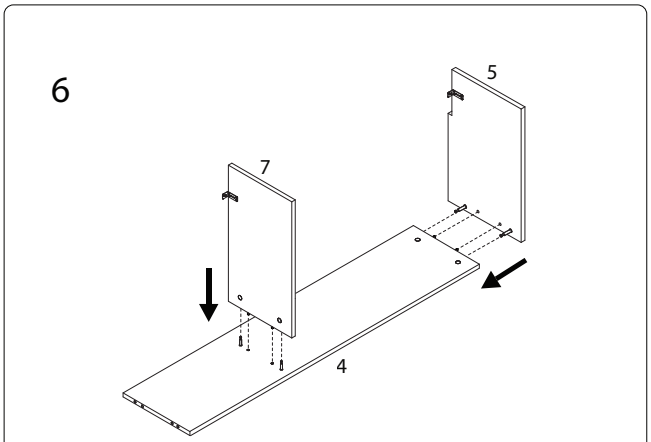
3


5
x 1
6
x 1
7
x 1
A
x 2
E
x 3
F
M4 x 14
x 12
7
2
2
1
6
1
2
2
5
3
3
1
1
F
E
2
C
3
5
A

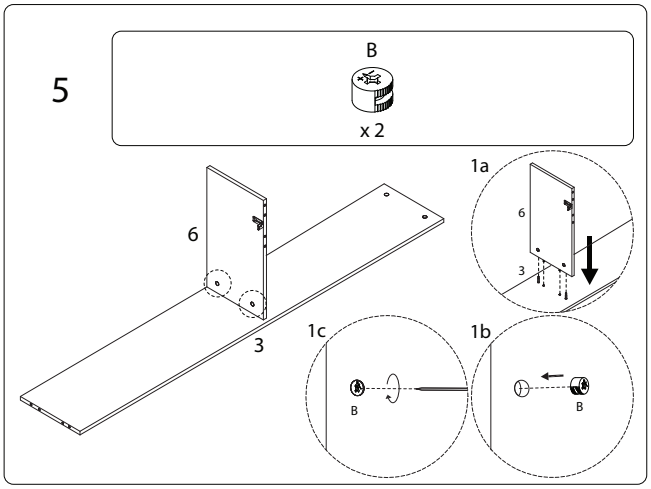
4


3
x 1
4
x 1
A
x 4
3
4
A

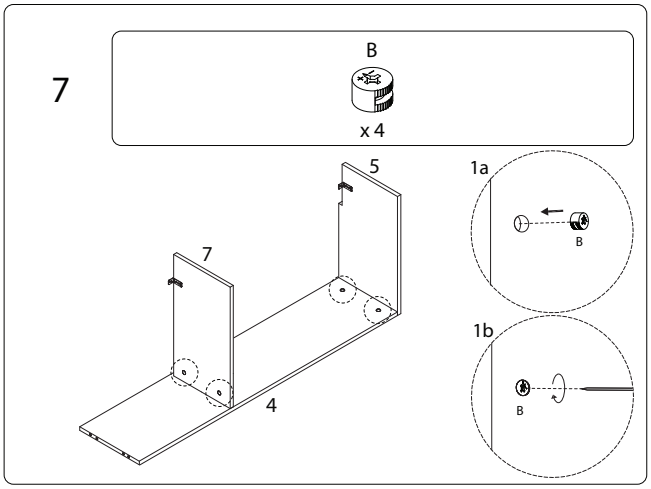
6


5
7
4

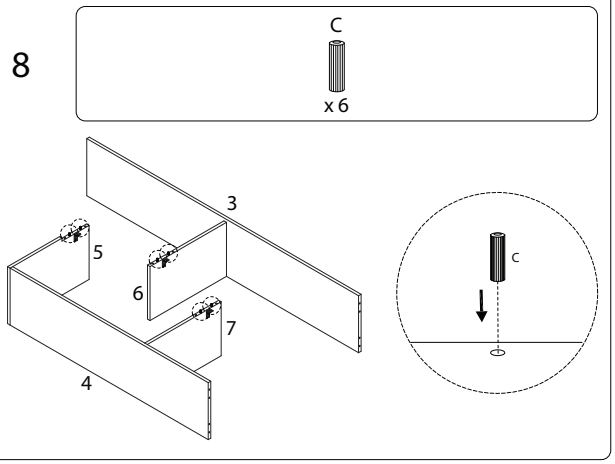
5


B
x 2
6
3
1a
6
3
1c
1b
B
B

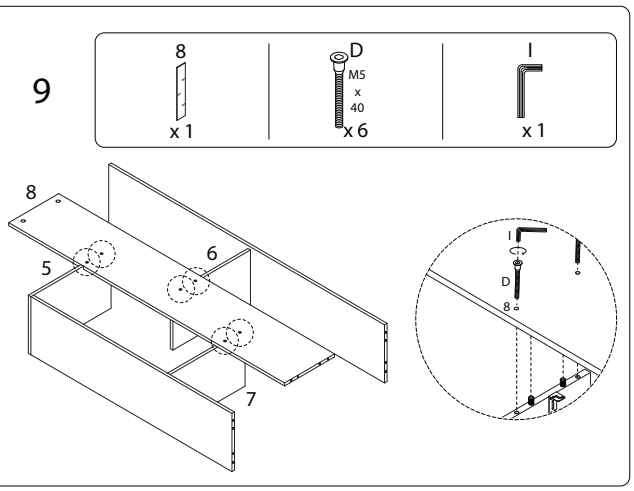
7


B
x 4
5
7
4
1a
B
1b
B

8

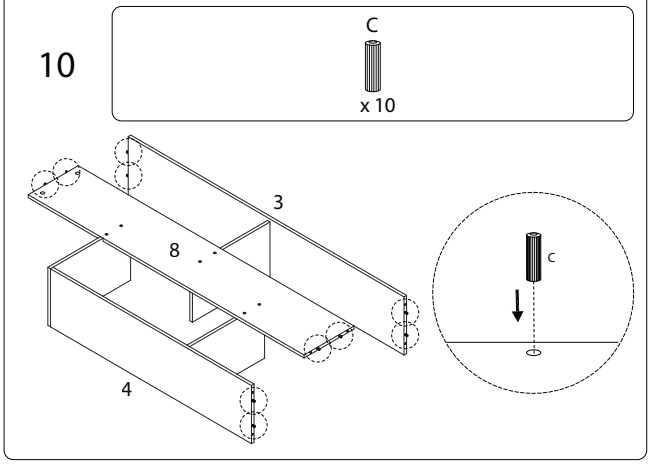


9

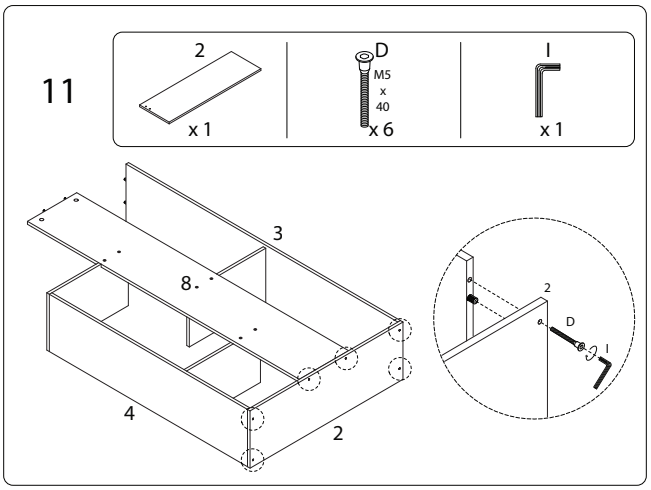


8/12

10

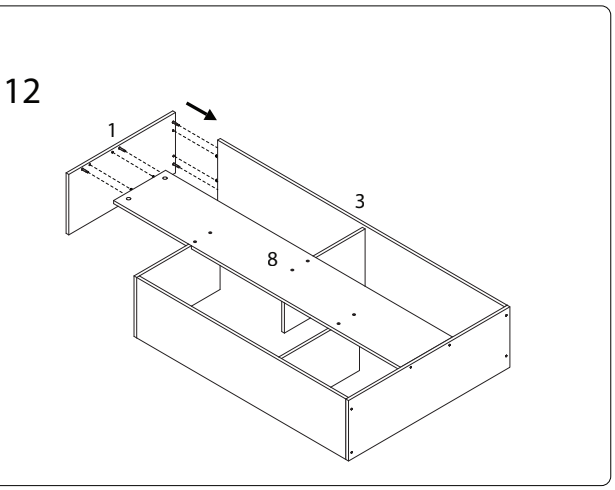


11

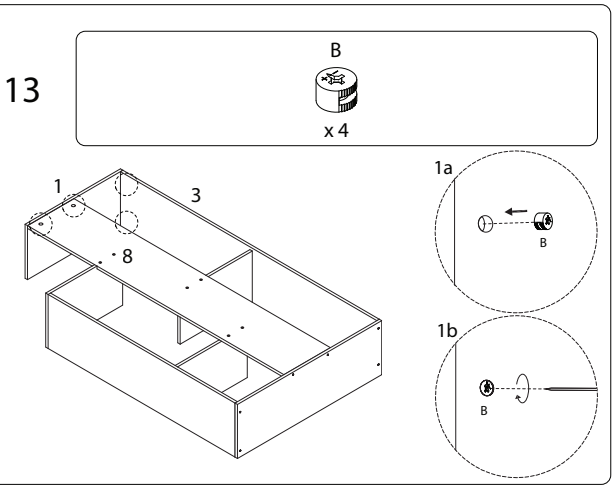


9/12

12

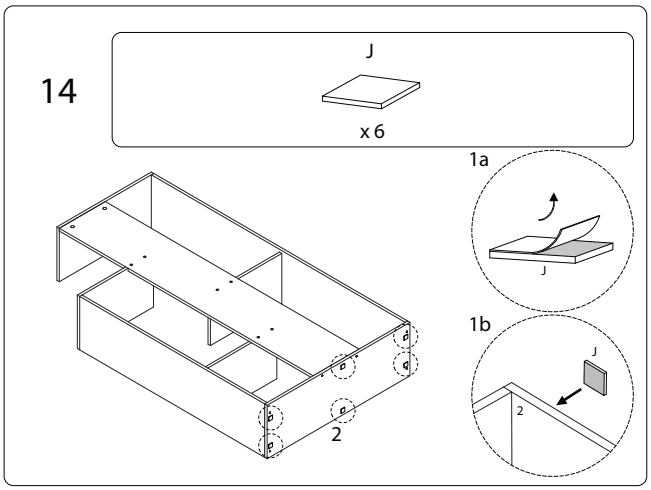


13

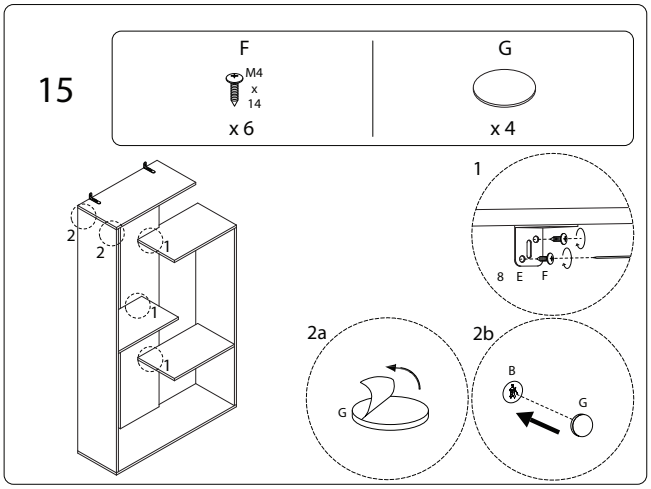


10/12

14



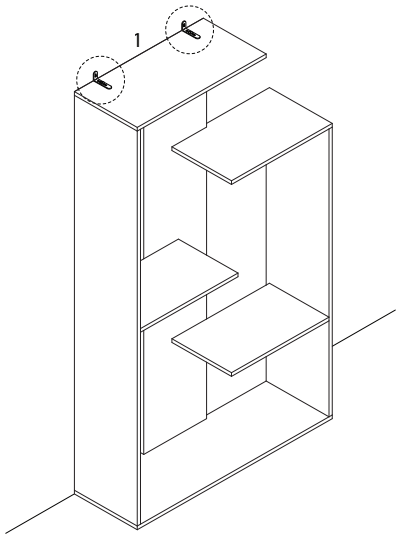
15

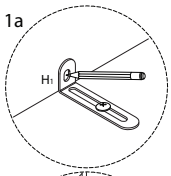


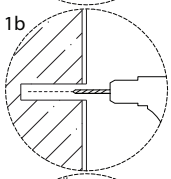
11/12

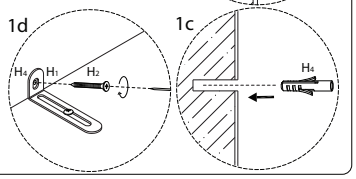
16

H_2	H_4
 M4 x 40	
x 2	x 2









2335/KAHNTAH/201025/