YERRES

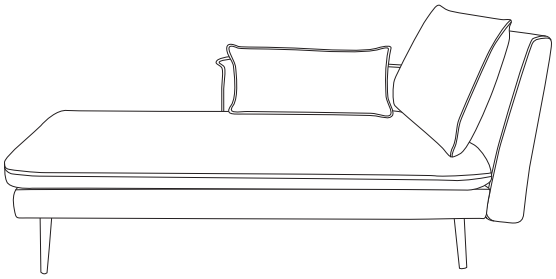

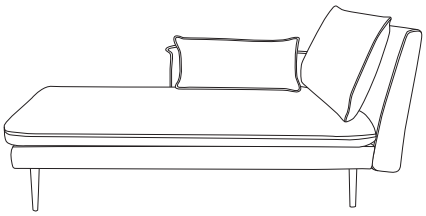

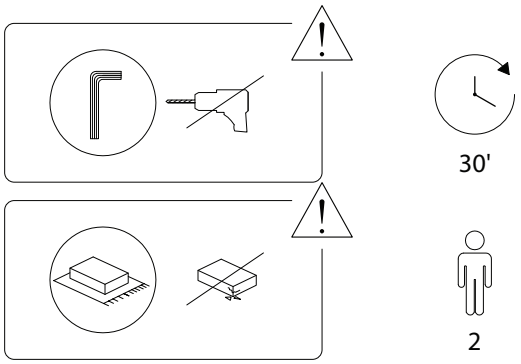

1/5

A1	A2	B	C	D
x 1	x 1	x 1	x 1	x 4

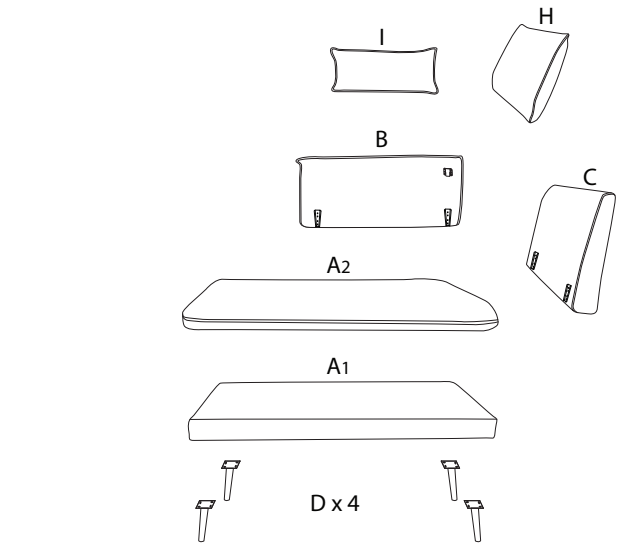

E	F	G	H	I
x 16	x 1	M8 x 16 x 16	x 1	x 1

2/5

1

A1	D	E	F	G
x 1	x 4	x 16	x 1	M8 x 16 x 16

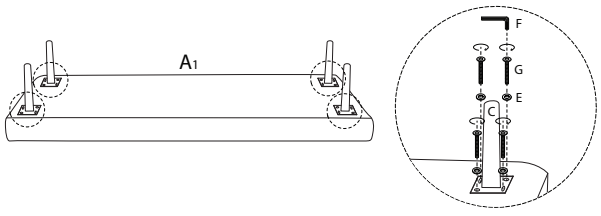

2

C
x 1

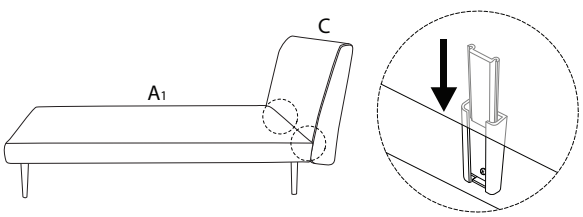

3/5

3

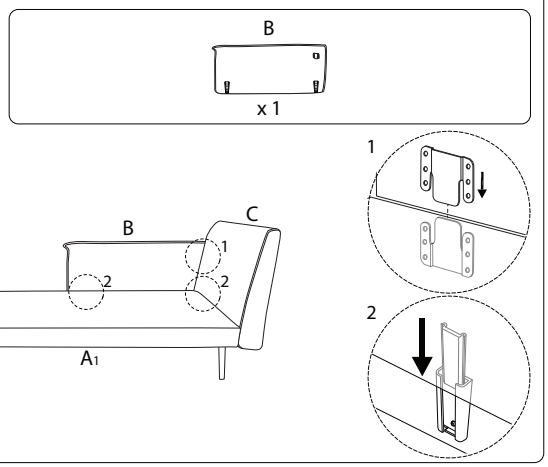

4

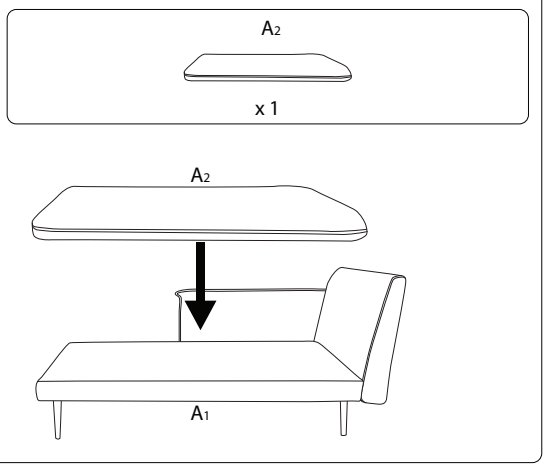

!

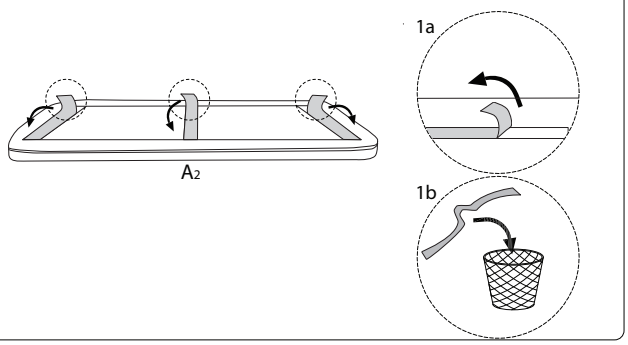

5

