ASSEMBLY INSTRUCTIONS

<<Before assembling,check all the hardwares and panels>>

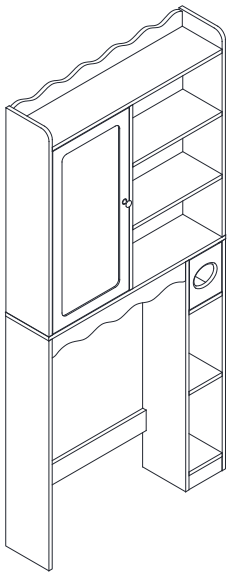

Hardware:

Letter	Piece	Number	Letter	Piece	Number
A	6x30mm	63pcs	J		2pcs
B	6x35mm	42pcs	K	4x14mm	12pcs
C	15x9.5mm	42pcs	L		2pcs
D		1pc	M		1pc
E	3x12mm	3pcs	N	3x14mm	2pcs
F	4x35mm	8pcs	O		1pc
G	4x16mm	1pc	P		2pcs
H	3x14mm	16sets	Q		2sets
I		1pc			

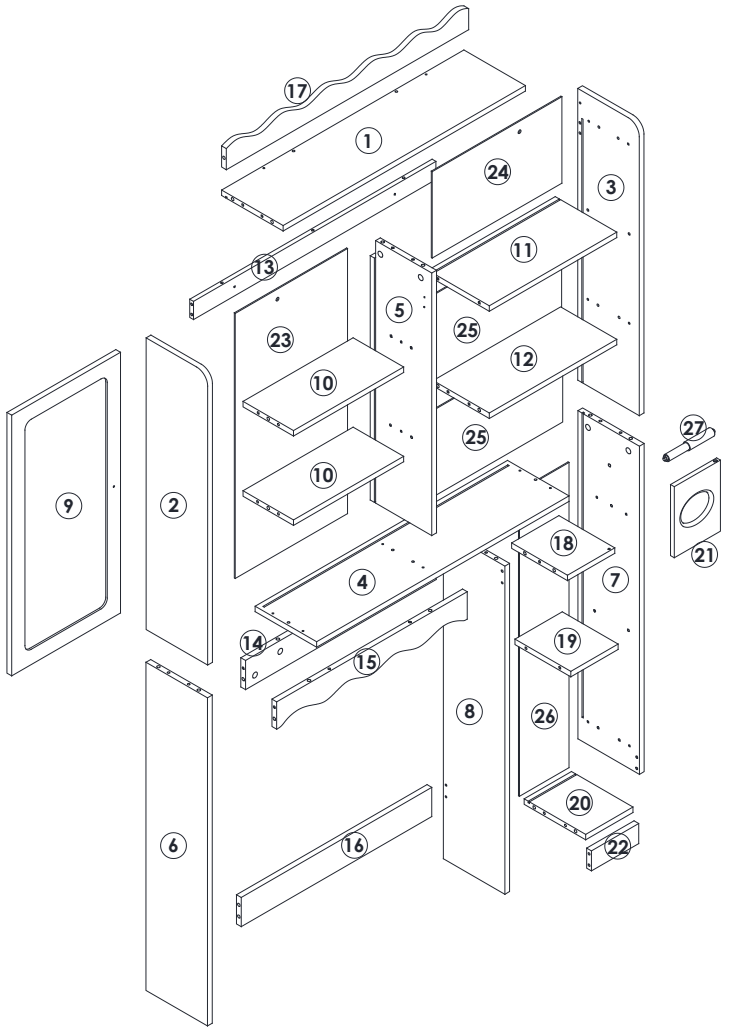

①

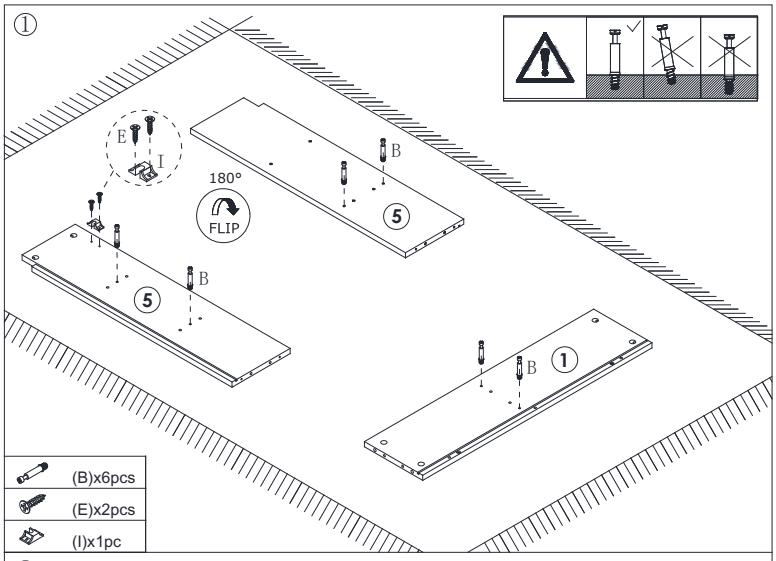

(B)x6pcs
(E)x2pcs
(I)x1pc

②

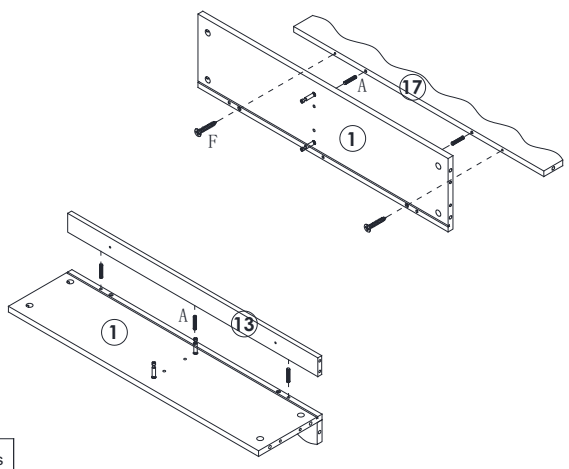

(A)x5pcs
(F)x2pcs

③

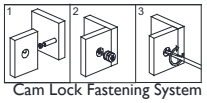

Cam Lock Fastening System

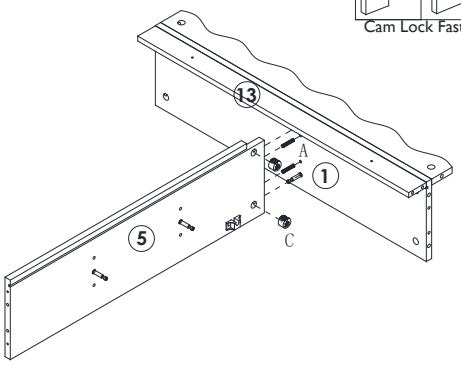

(A)x2pcs
(C)x2pcs

④

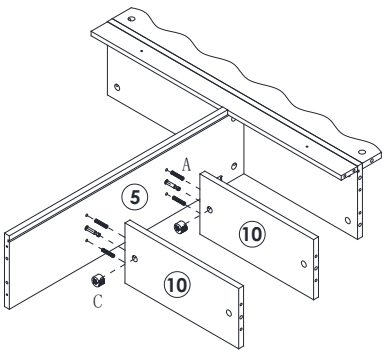

(A)x4pcs
(C)x2pcs

⑤

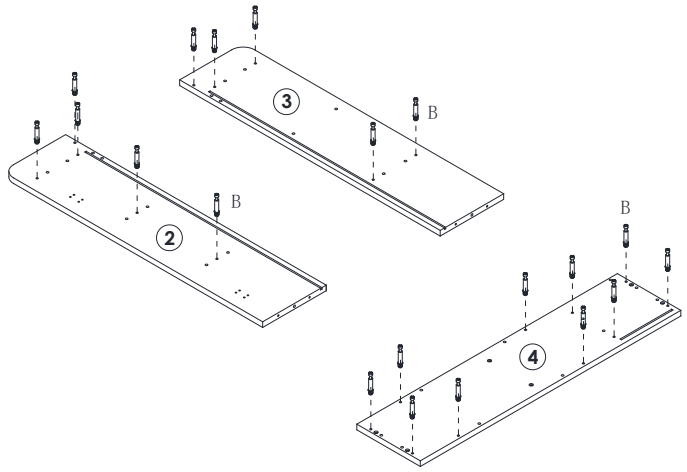

(B)x20pcs

⑥

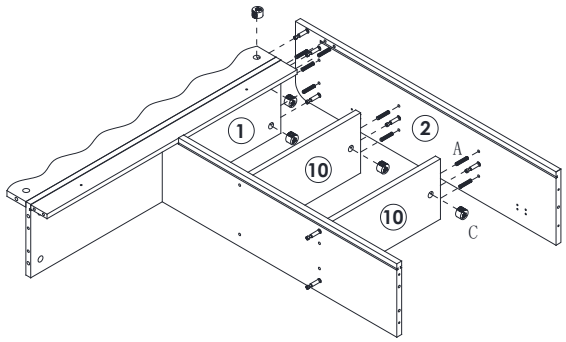

(A)x8pcs

(C)x5pcs

⑦

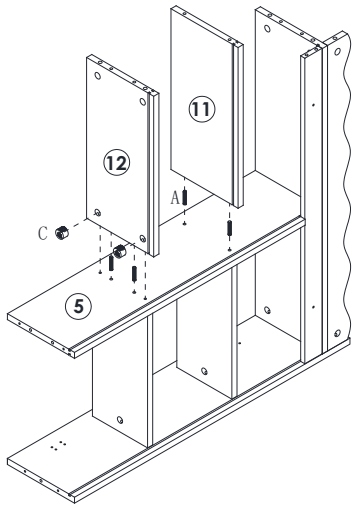

(A)x4pcs

(C)x2pcs

⑧

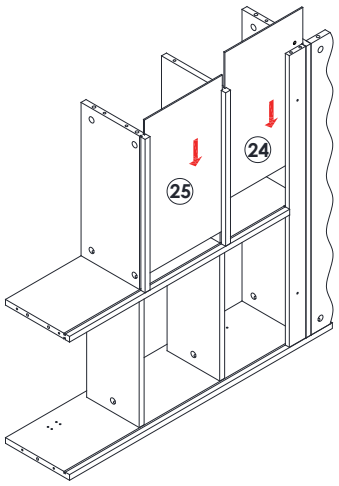

⑨

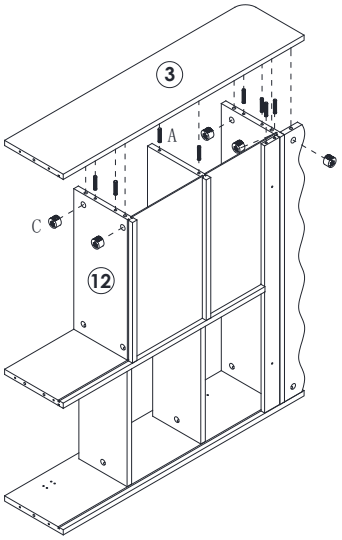

(A)x8pcs

(C)x5pcs

⑩

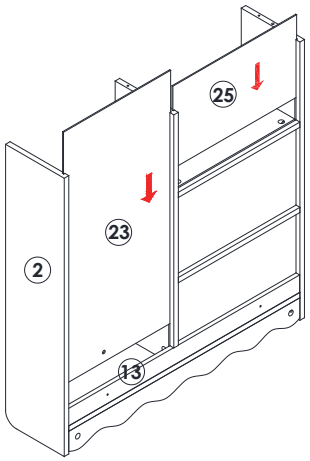

⑪

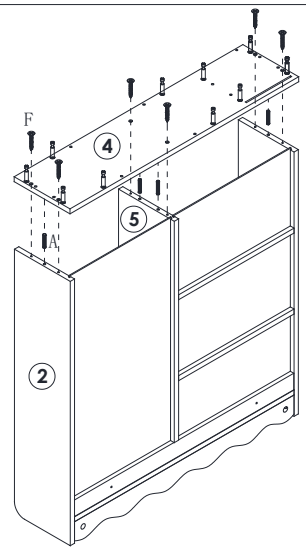

(A)x4pcs

(F)x6pcs

⑫

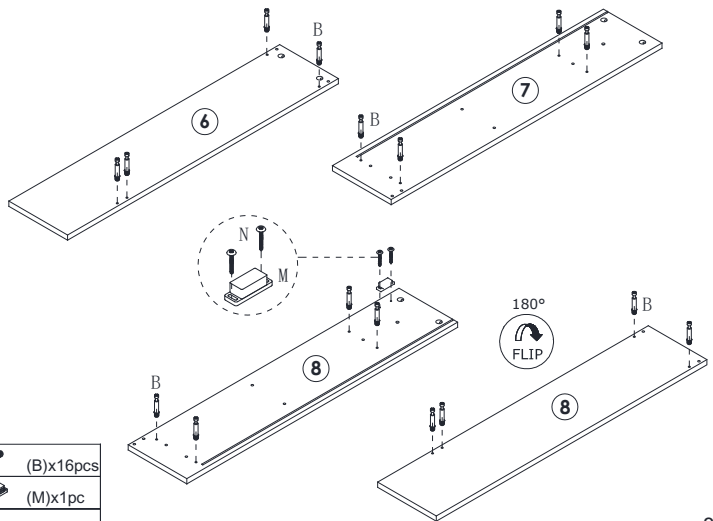

(B)x16pcs

(M)x1pc

(N)x2pcs

13

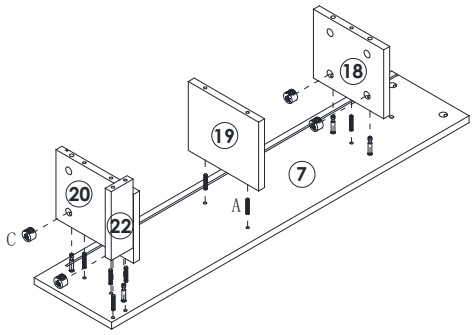

(A)x7pcs
(C)x4pcs

15

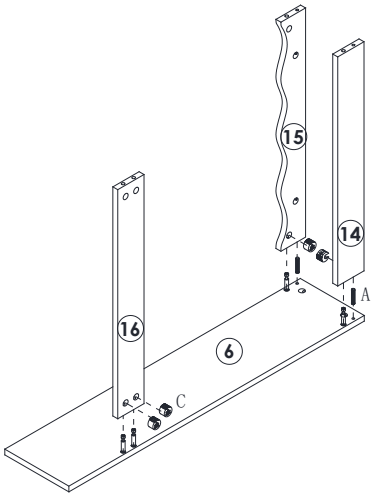

(A)x2pcs
(C)x4pcs

14

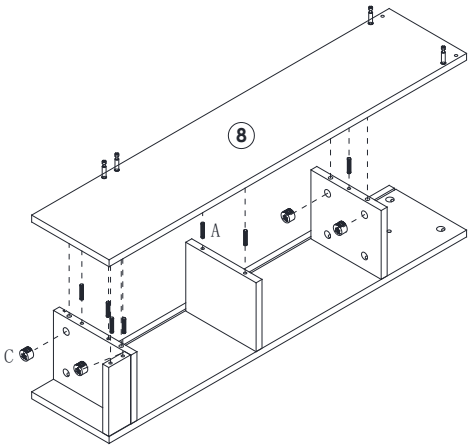

(A)x7pcs
(C)x4pcs

9

16

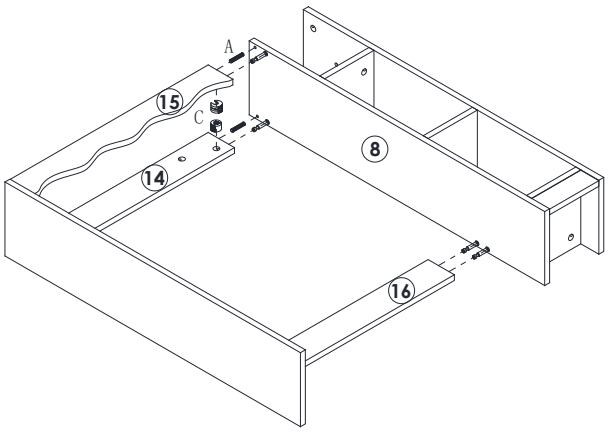

(A)x2pcs
(C)x2pcs

10

17

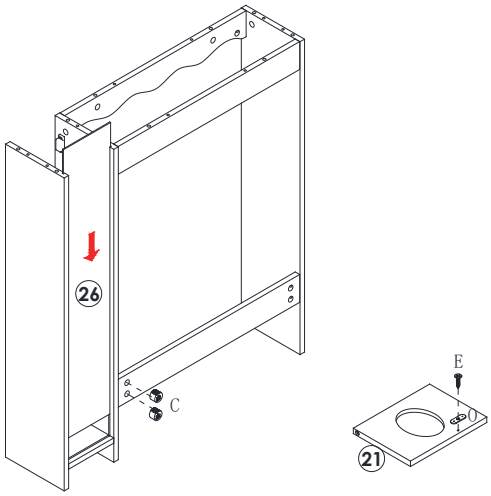

(C)x2pcs
(E)x1pc
(O)x1pc

18

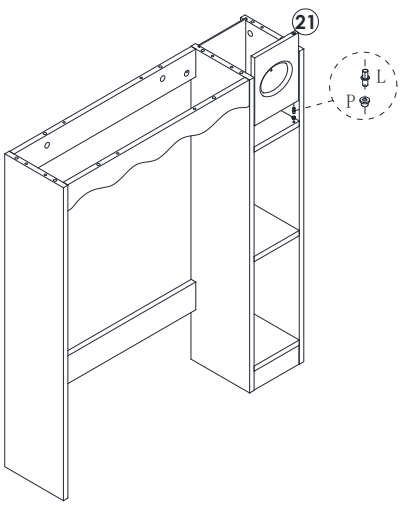

(L)x1pc
(P)x1pc

11

19

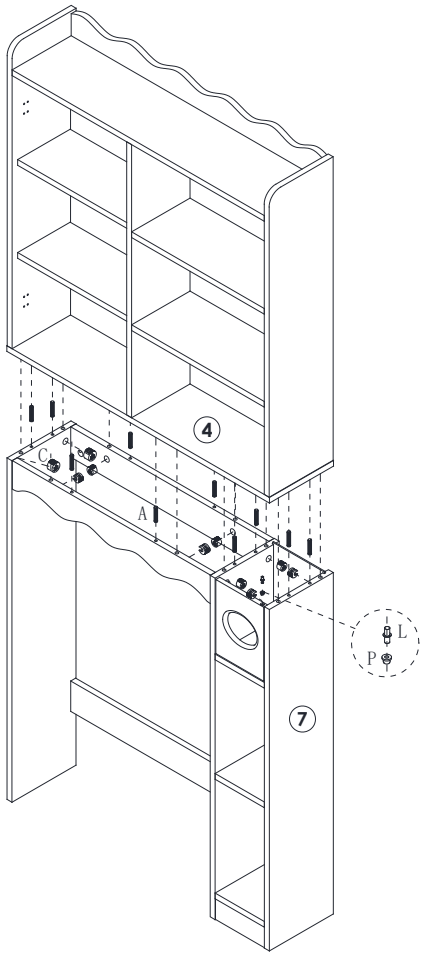

(A)x10pcs
(C)x10pcs
(L)x1pc
(P)x1pc

12

20

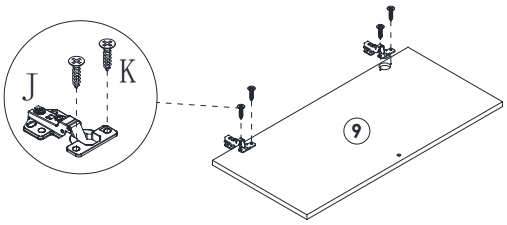

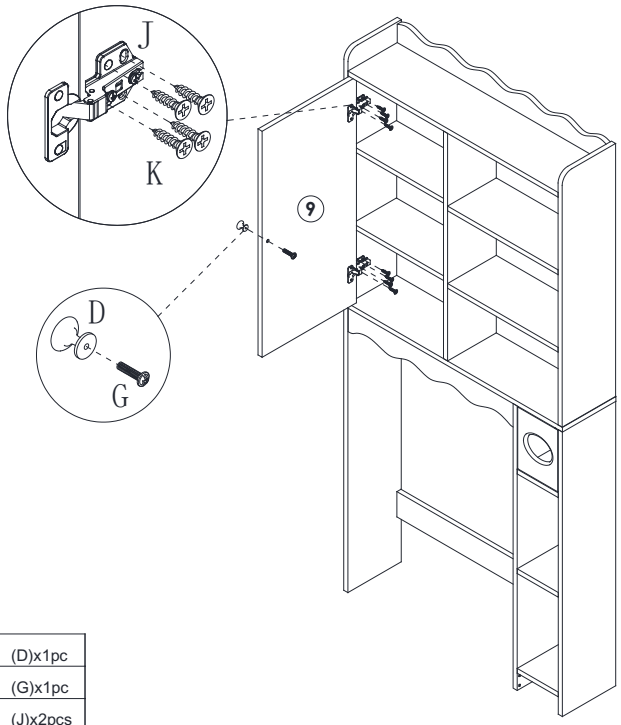

	(D)x1pc
	(G)x1pc
	(J)x2pcs
	(K)x12pcs

13

21

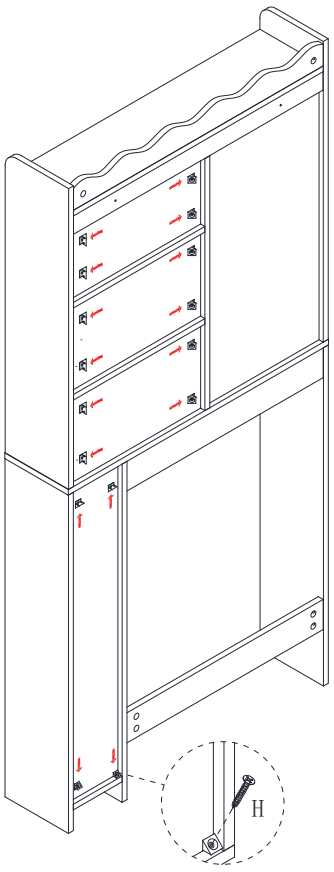

(H)x16sets

14

22

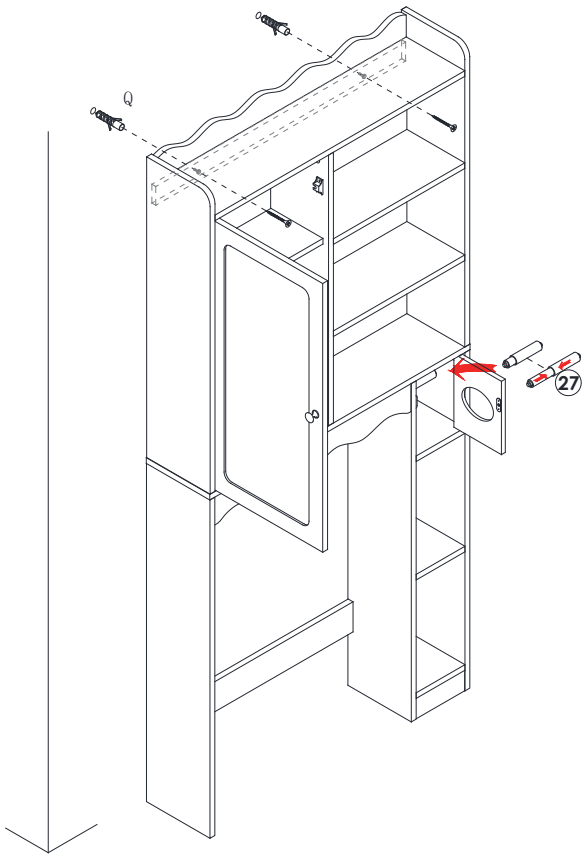

(Q)x2sets

15

23

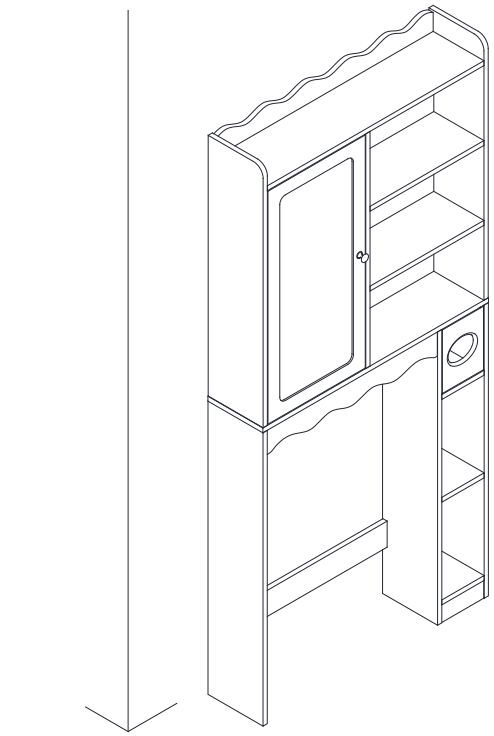

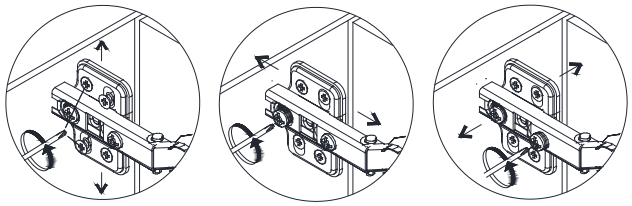

16