JULE

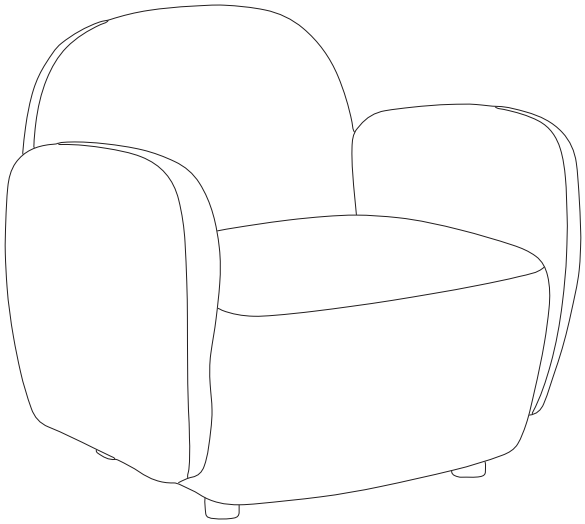

1/4

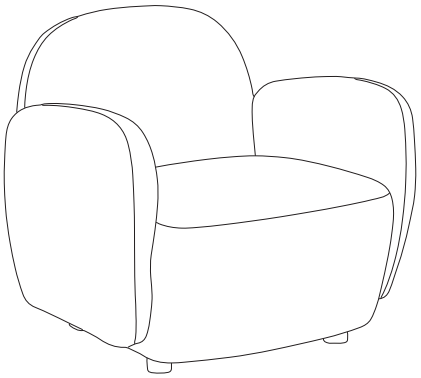

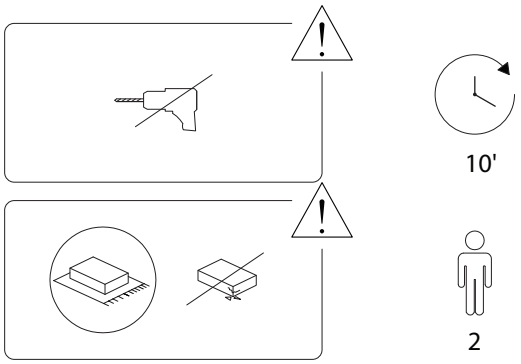

2/4

2970/JULE/160926/

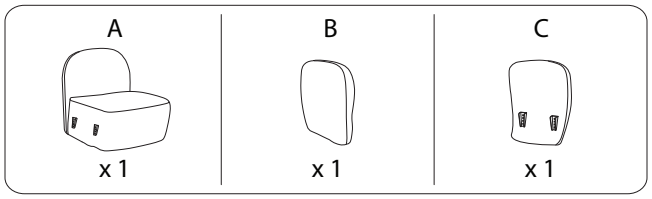

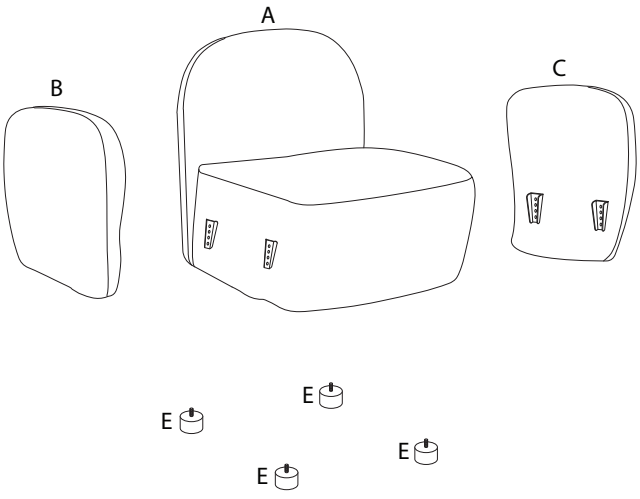

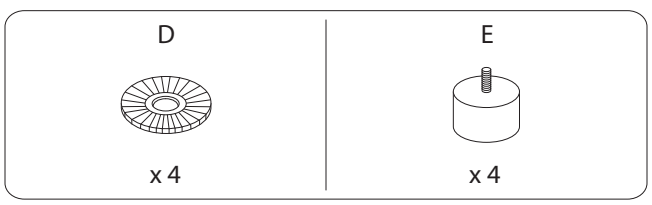

3/4

2970/JULE/160926/

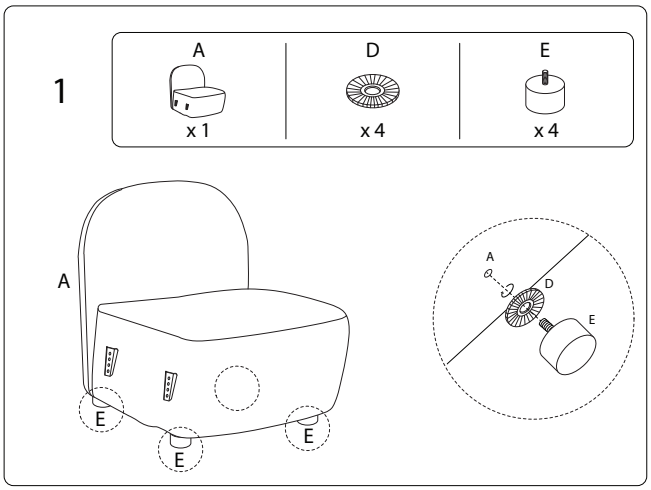

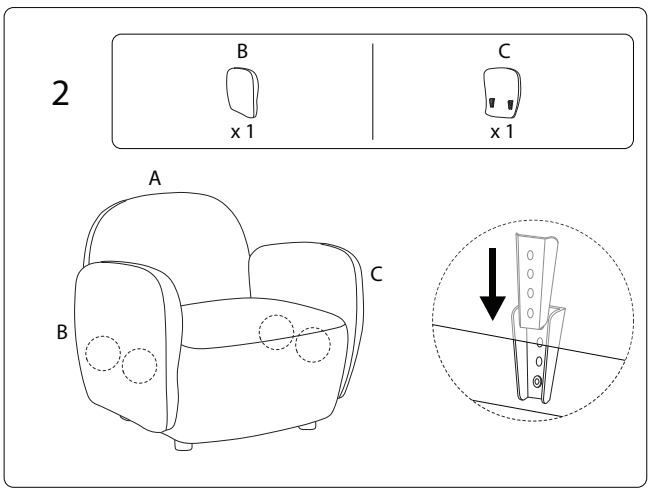

4/4

2970/JULE/160926/