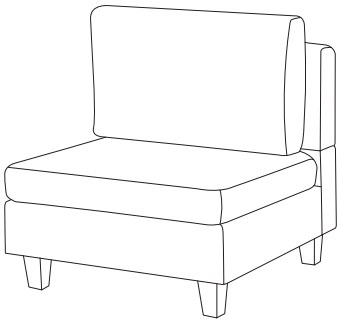

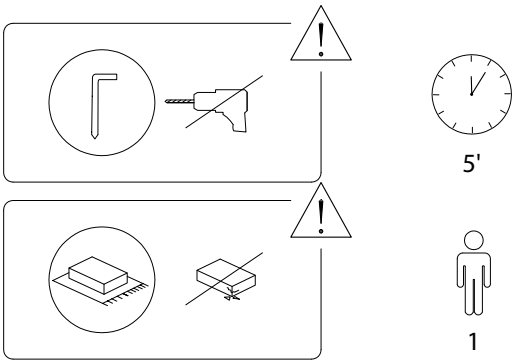

A	B	C	D
x 1	x 1	x 1	x 4

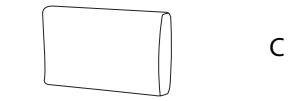

C

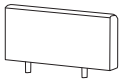

B



A



D x 4

E	F	G	H
x 1	x 1	M4 x 15 x 10	x 1

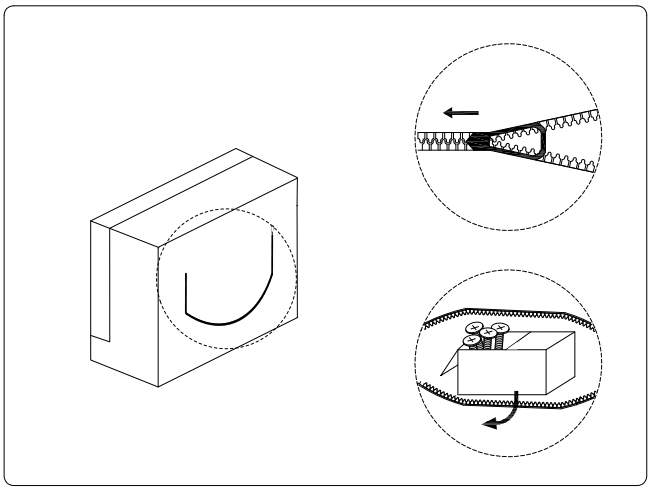

2

D

x 4

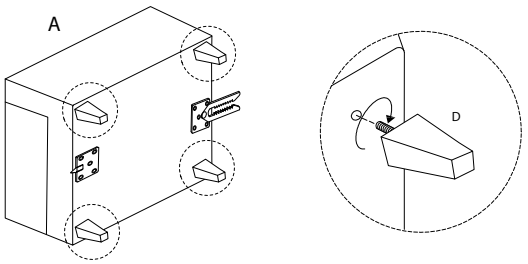

1

A	E	F	G	H
x 1	x 1	x 1	M4 x 15 x 10	x 1

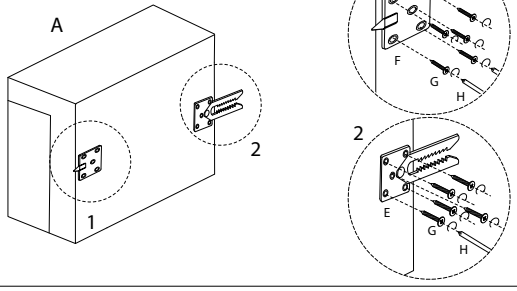

3

B

x 1

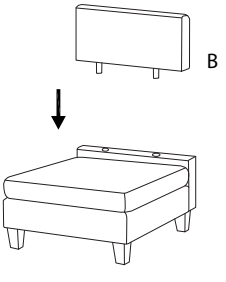

4

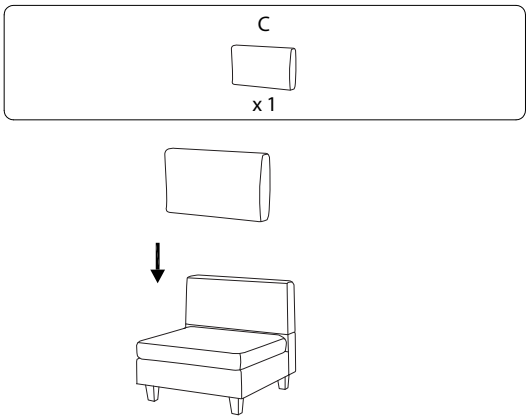

!

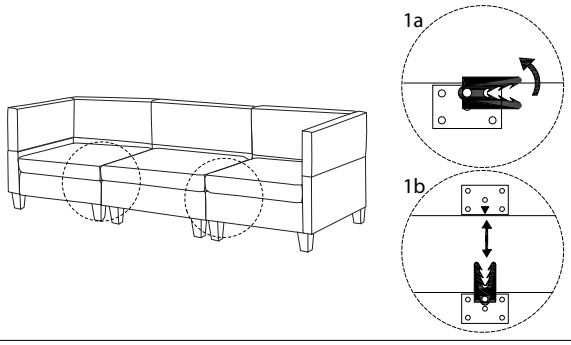

760/FEVIKe1/150620/