LAYE

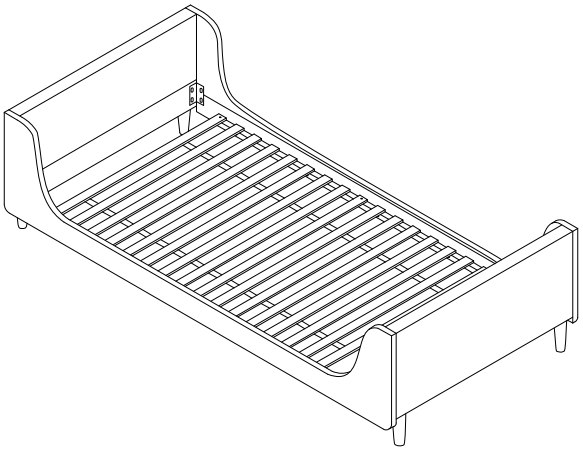

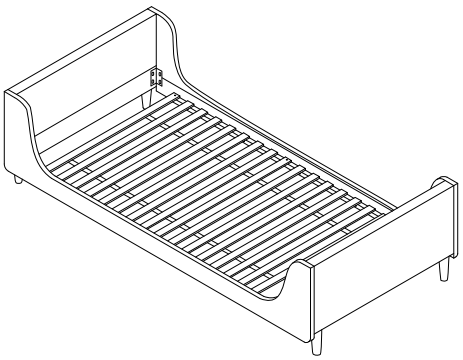

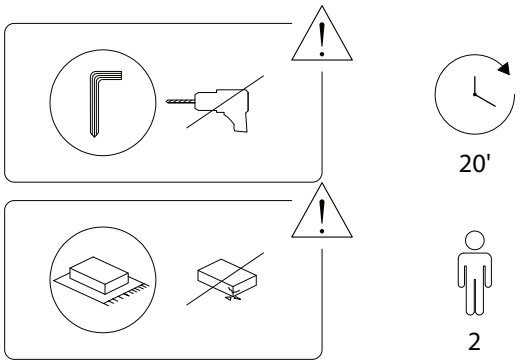
20'
2

1/6

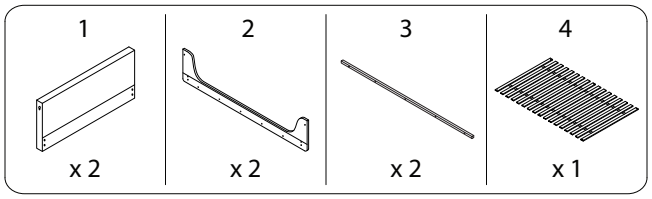
1
x 2
2
x 2
3
x 2
4
x 1

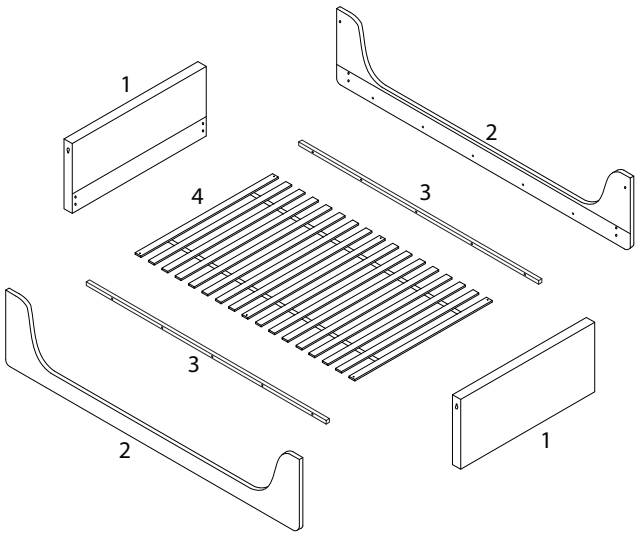
1
2
4
3
3
2
1

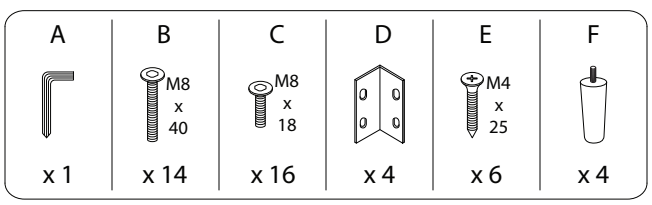
A
x 1
B
M8
x
40
x 14
C
M8
x
18
x 16
D
x 4
E
M4
x
25
x 6
F
x 4

2/6

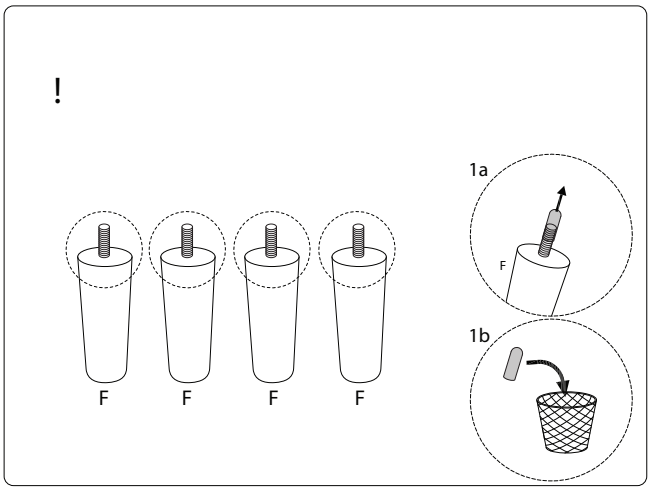
!
F
F
F
F
1a
F
1b

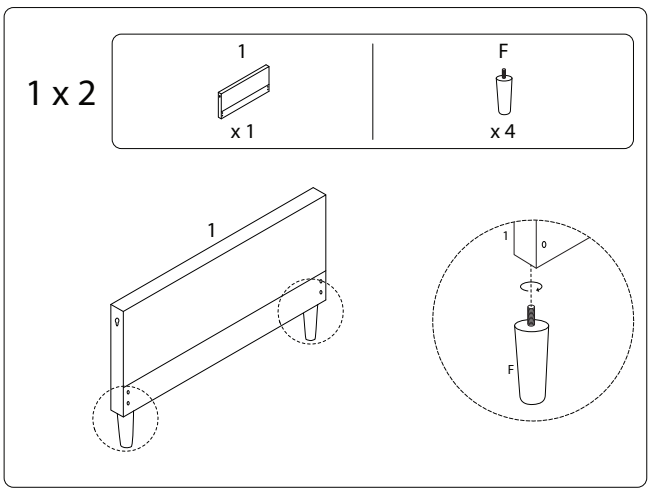
1 x 2
1
x 1
F
x 4
1
1
0
F

3/6

2 x 2

2	3	A	B
x 1	x 1	x 1	x 5

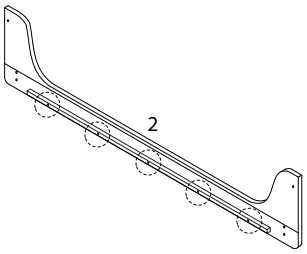

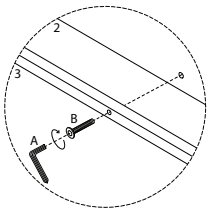

3 x 2

A	B
x 1	x 2

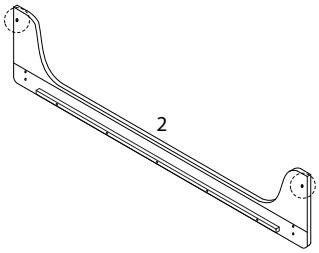

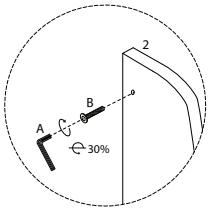

4

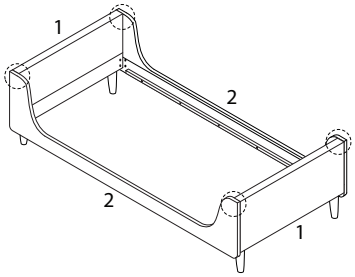

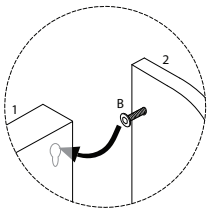

5

A	C	D
x 1	x 16	x 4

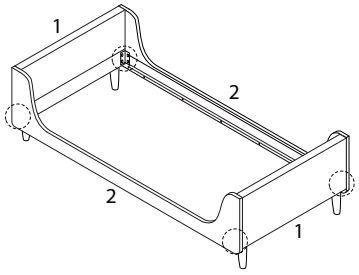

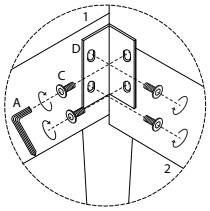

6

4	A	E
x 1	x 1	x 6

