ATJONI

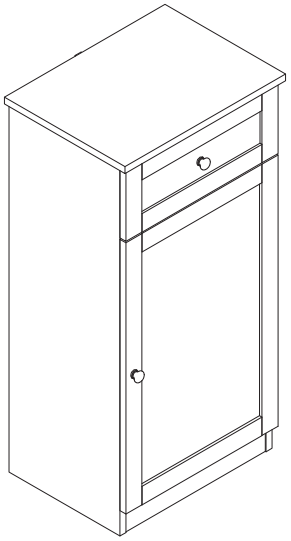

1/15

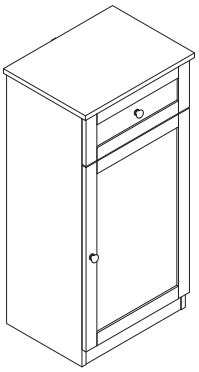

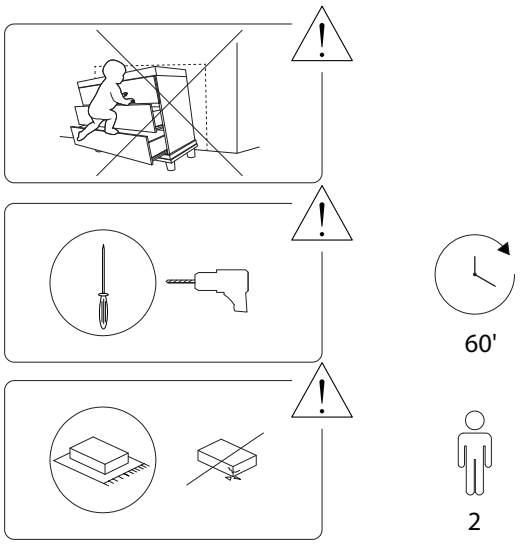

2/15

2813/ATJONI/061026/

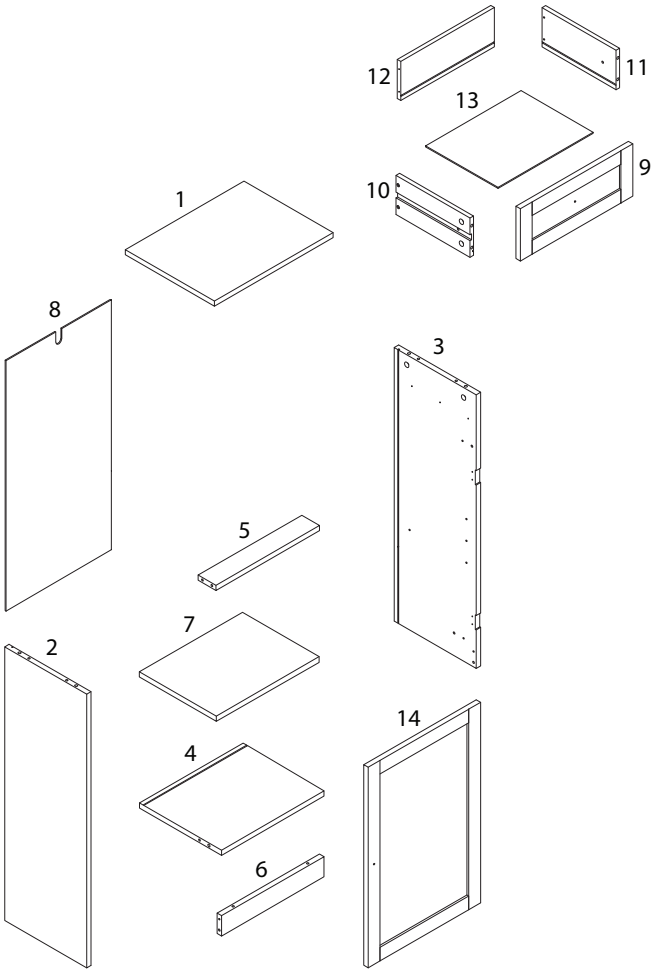

3/15

1 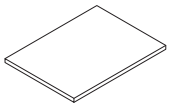 x 1	2  x 1	3  x 1
4 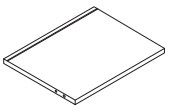 x 1	5 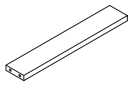 x 1	6 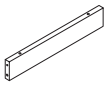 x 1
7 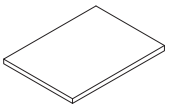 x 1	8  x 1	9 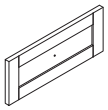 x 1
10 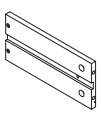 x 1	11 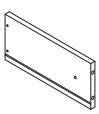 x 1	12 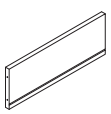 x 1
13 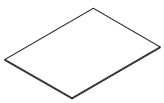 x 1		14 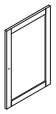 x 1

4/15

2813/ATJONI/061026/

A	B	C	D
			
x 14	x 17	x 17	x 5
E	**F**	**G**	**H1**
			
x 15	x 2	x 4	x 2
H2	**J**	**K1**	**K2**
	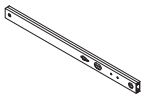		
x 2	x 2	x 1	x 2
L	**M**	**N1**	**N2**
			
x 2	x 4	x 4	x 4
P	**Q**	**R1**	**R2**
		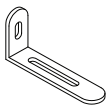	
x 1	x 1	x 1	x 2

5/15

1

2	3	4	B	E	J	K1	K2
							
x 1	x 1	x 1	x 9	x 6	x 2	x 1	x 2

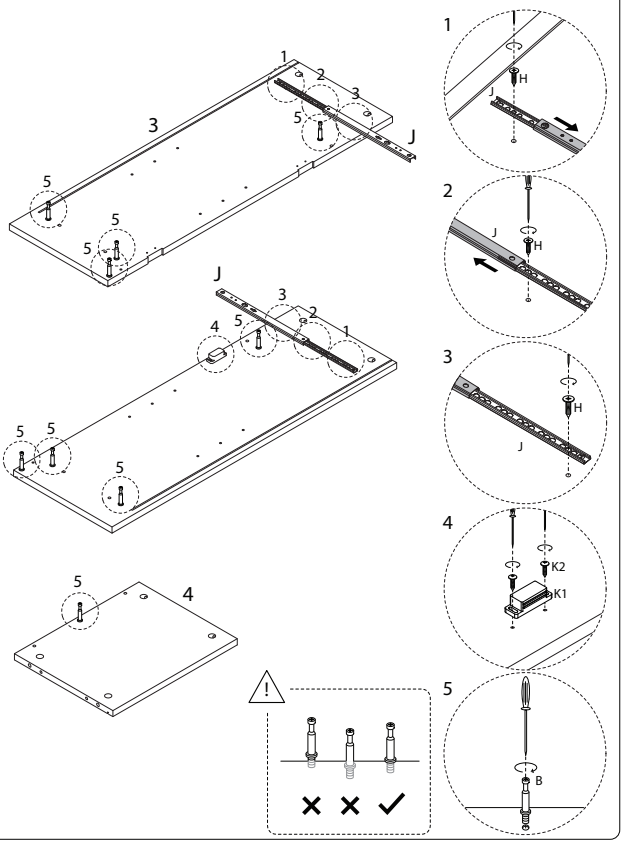

6/15

2

5	6	A
		
x 1	x 1	x 10

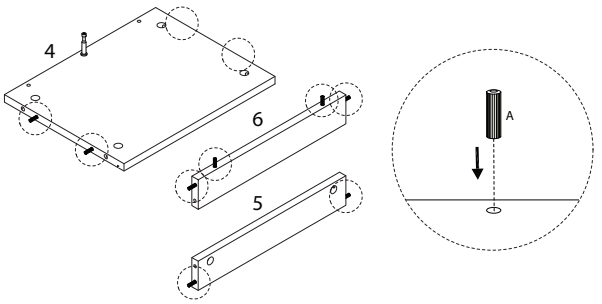

4

C

x 8

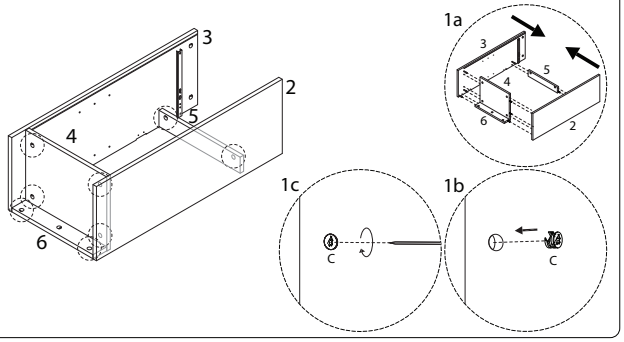

3

C

x 1

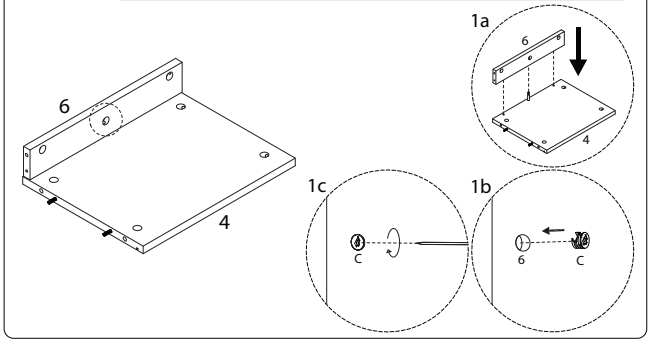

7/15

5

G

x 4

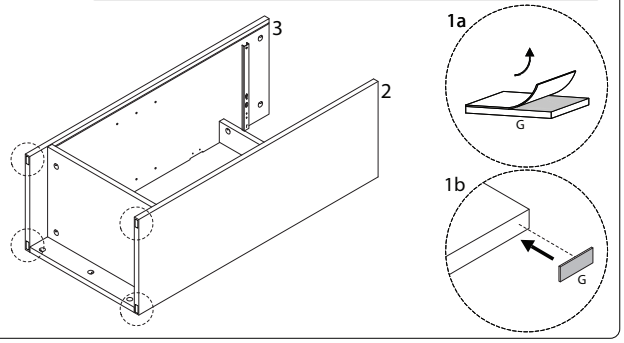

8/15

6

8 x 1

A x 4

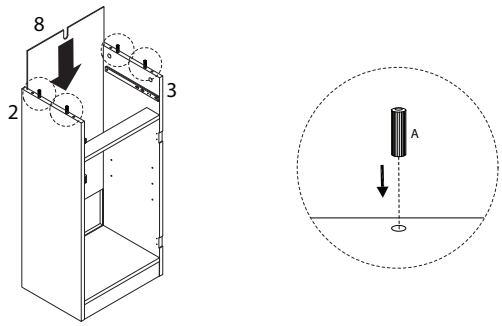

8

C x 4

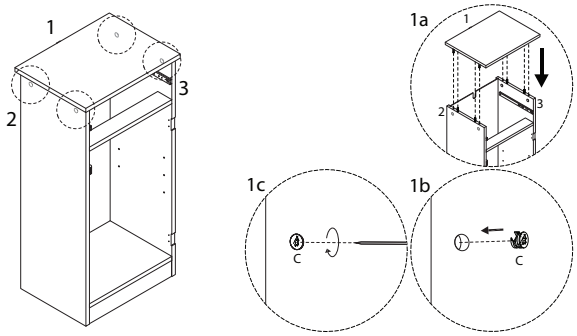

7

1 x 1

B x 4

R1 x 1

R2 M4 x 12 x 2

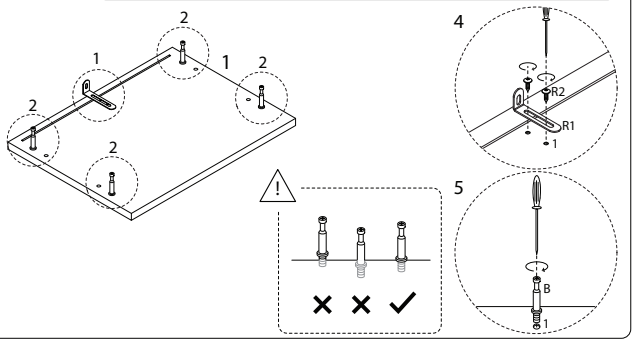

9

N1 x 4

N2 M3 x 16 x 4

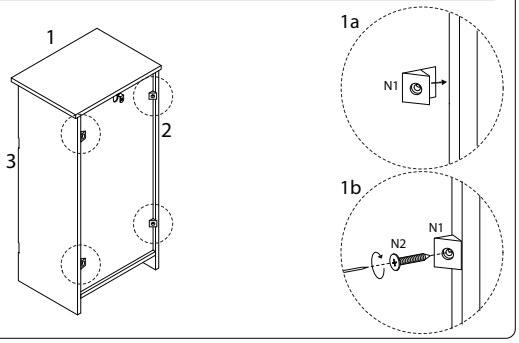

10

D M4 x 35 x 1

Q x 1

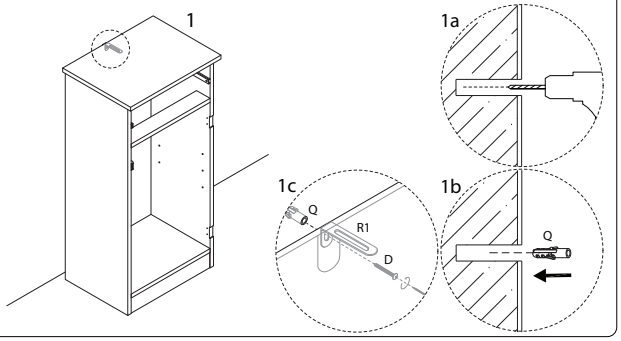

12

E M3 x 12 x 4

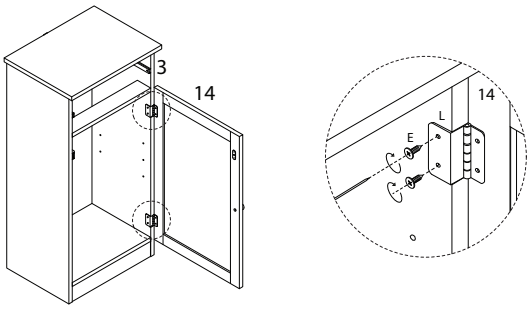

11

14 x 1

E M3 x 12 x 5

H1 x 1

H2 M4 x 16 x 1

L x 2

P x 1

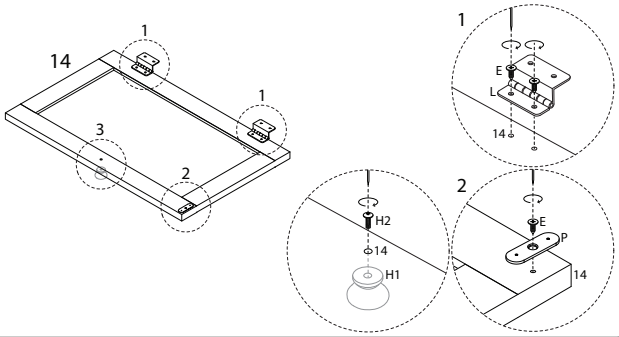

13

10 x 1

11 x 1

12 x 1

D M4 x 35 x 4

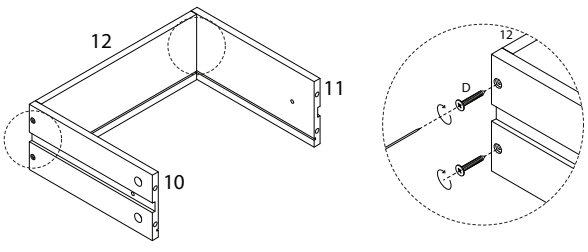

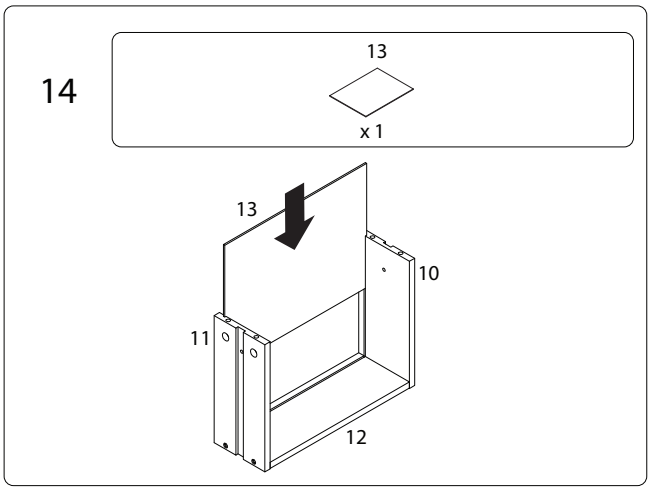

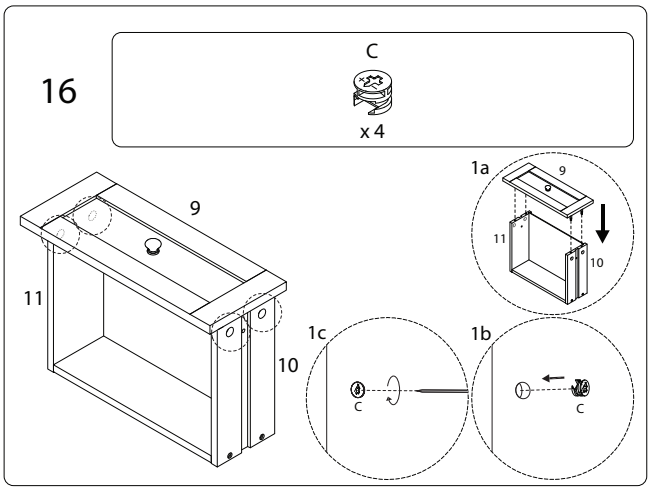

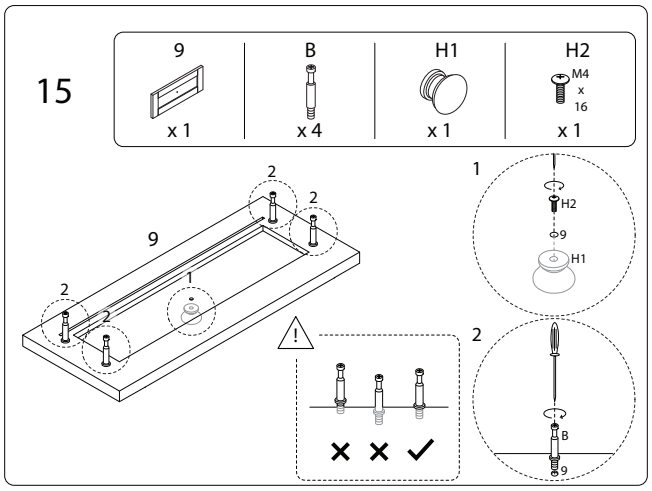

13/15

2813/ATJONI/061026/

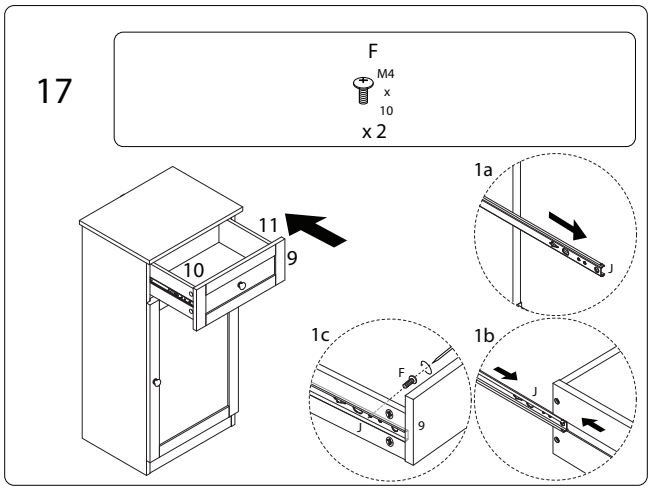

14/15

2813/ATJONI/061026/

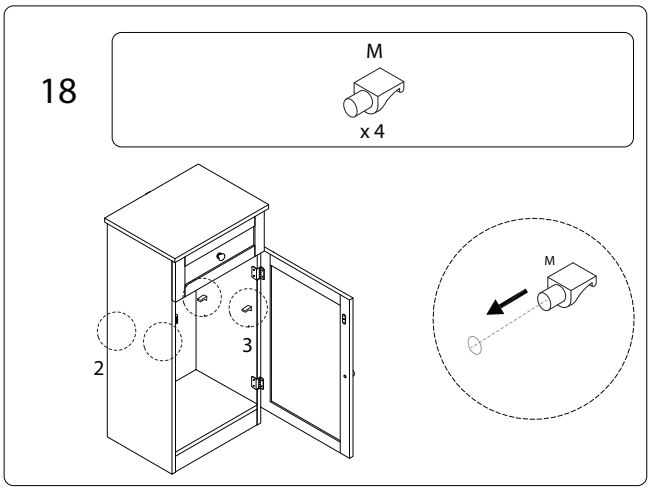

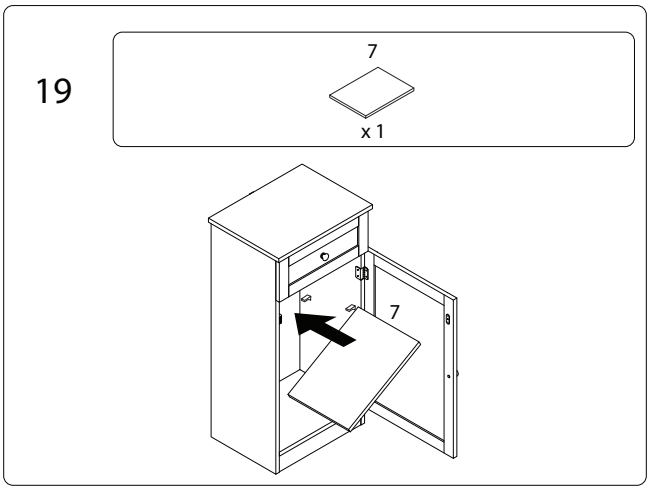

15/15

2813/ATJONI/061026/