FLORLI

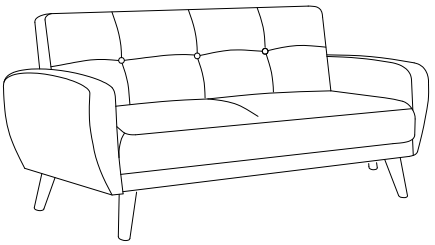

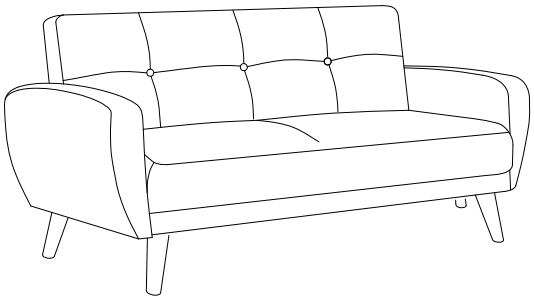

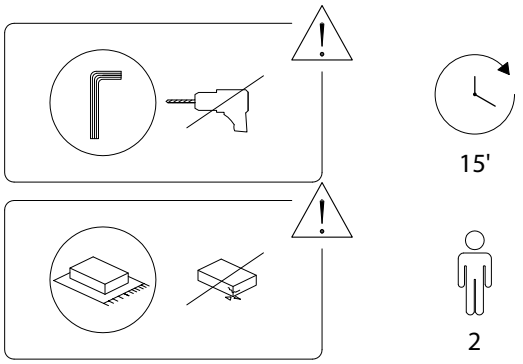

1/5

A	B	C
		
x 1	x 1	x 1

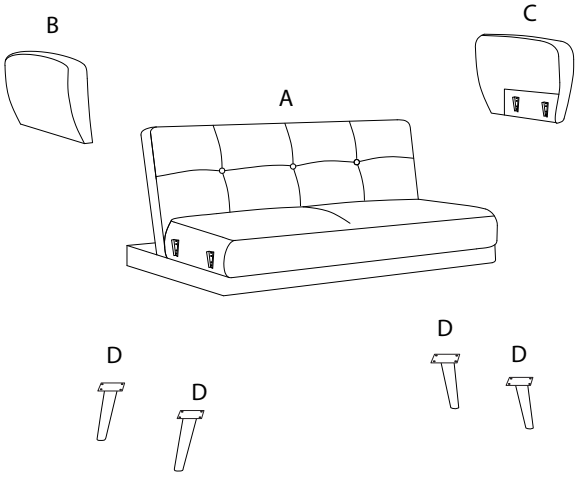

D	E	F
	 M5 x 20	
x 4	x 16	x 1

2/5

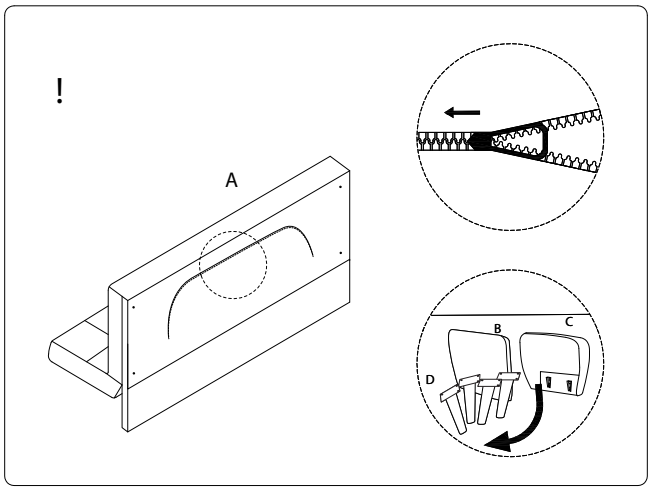

1

A	D	E	F
		 M5 x 20	
x 1	x 4	x 16	x 1

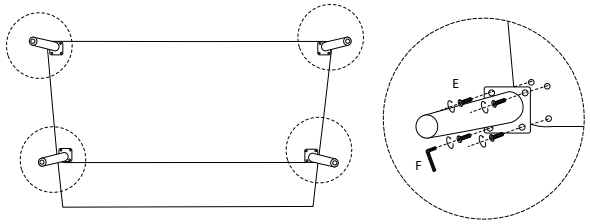

3/5

1282/FLORLI/250225/

2

B	C
	
x 1	x 1

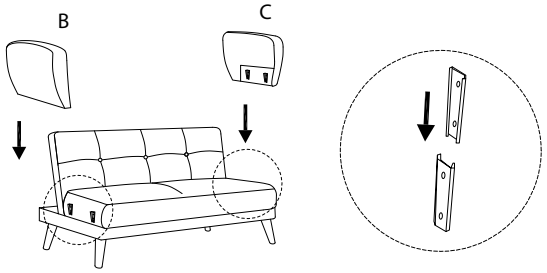

!

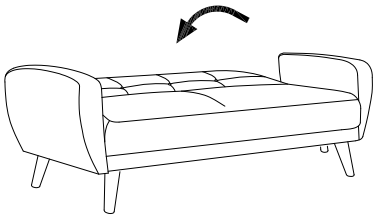

!

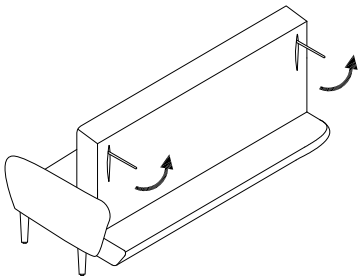

1282/FLORLI/250225/