ALVAR

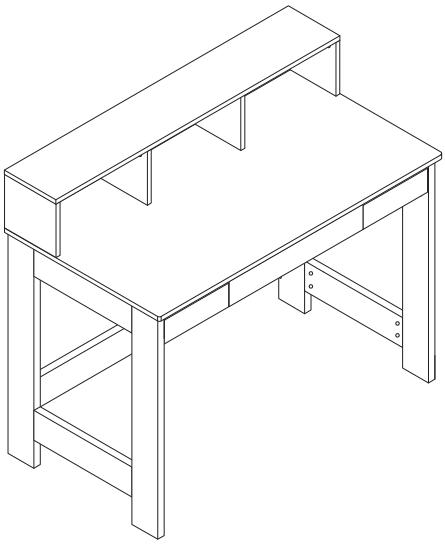

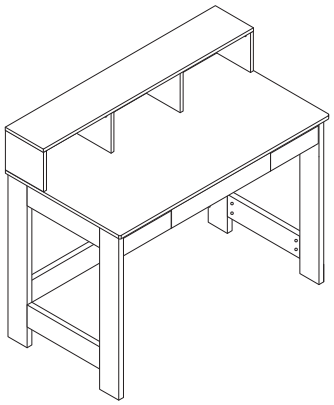

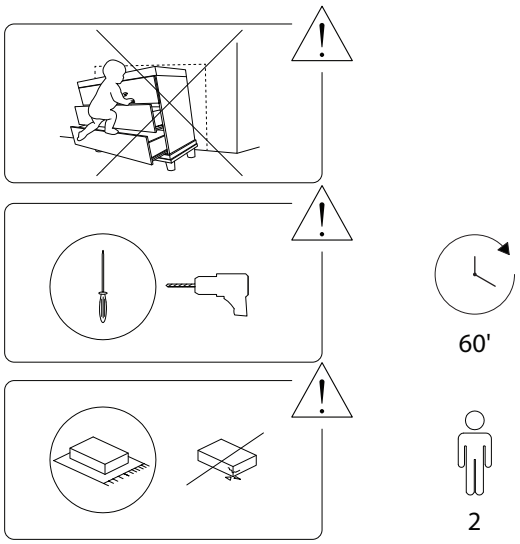
60'
2

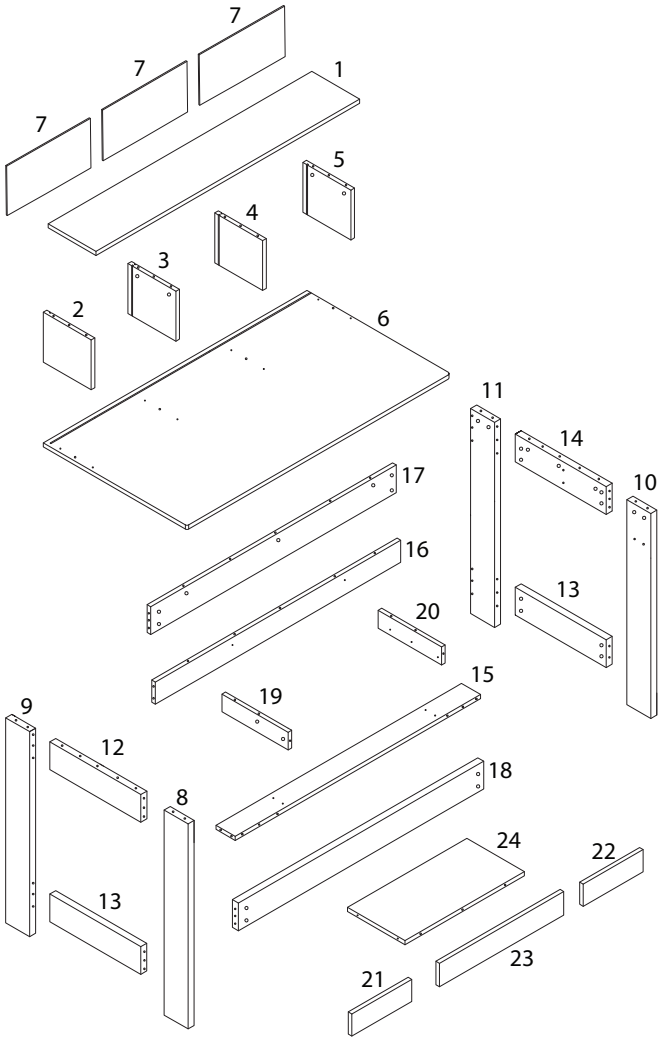
7
7
7
1
5
4
3
2
6
11
14
10
17
16
13
20
15
19
9
12
8
18
24
22
13
23
21

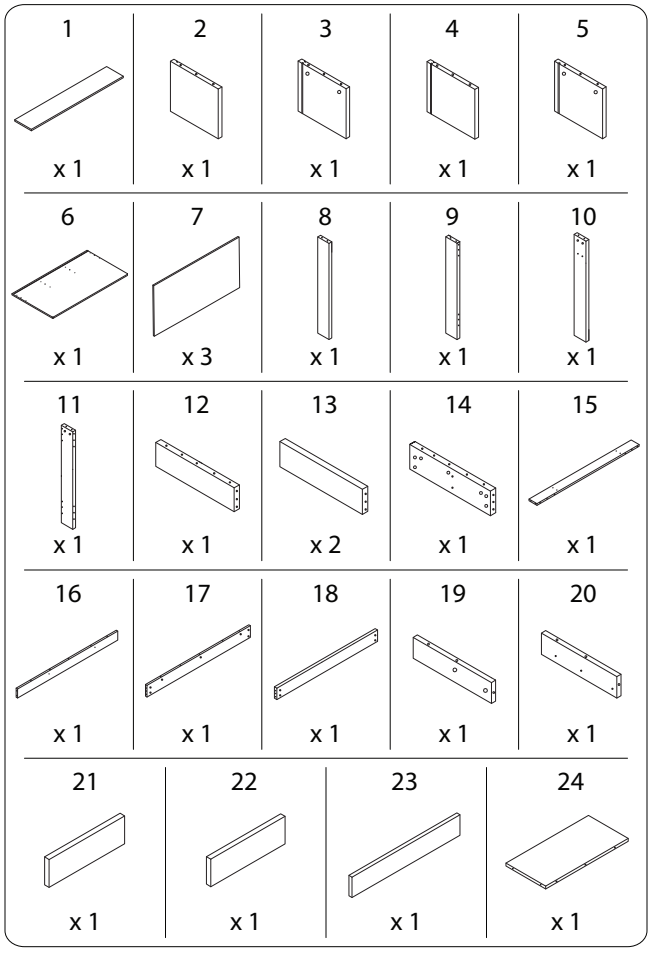
1 x 1
2 x 1
3 x 1
4 x 1
5 x 1
6 x 1
7 x 3
8 x 1
9 x 1
10 x 1
11 x 1
12 x 1
13 x 2
14 x 1
15 x 1
16 x 1
17 x 1
18 x 1
19 x 1
20 x 1
21 x 1
22 x 1
23 x 1
24 x 1

A	B	C
x 69	x 69	x 34
D	E	F
M4 x 35	M3 x 12	
x 16	x 10	x 12
G	H	I
M3 x 14		
x 12	x 2	x 4
J1	J2	
M4 x 14		
x 2	x 2	
J3	J4	
x 2	x 4	

1

8	9	12	14	21	22	23	A
x 1	x 1	x 1	x 1	x 1	x 1	x 1	x 25

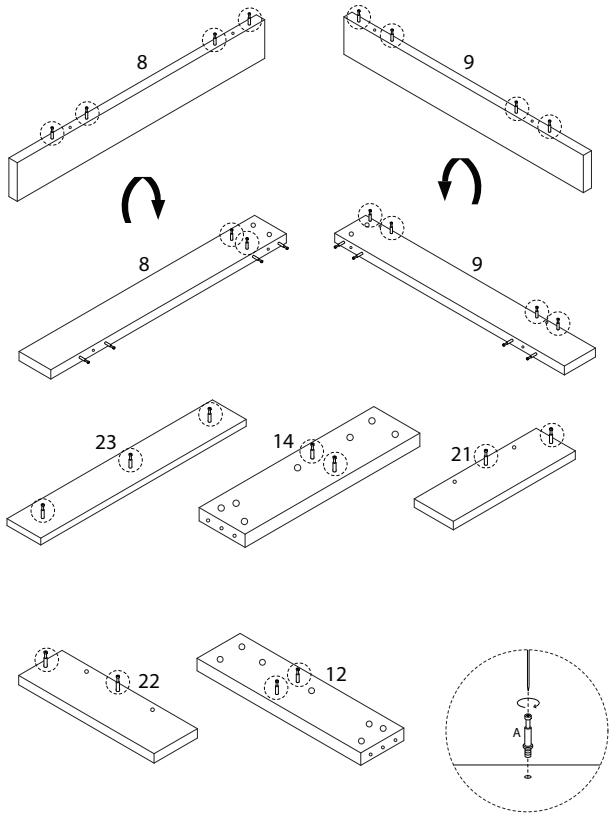

2

10	11	A
x 1	x 1	x 14

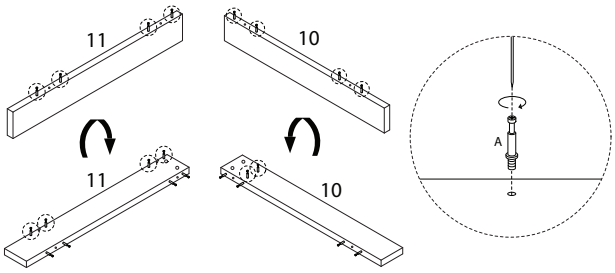

4

B
x 8

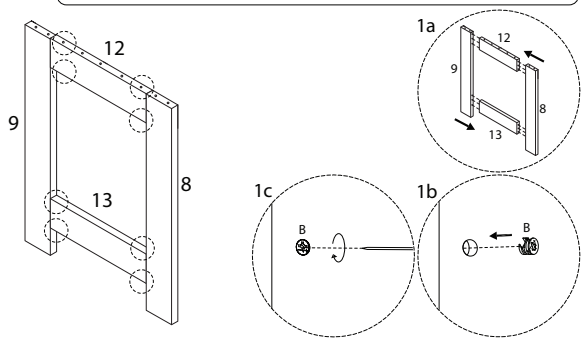

3

13	C
x 2	x 8

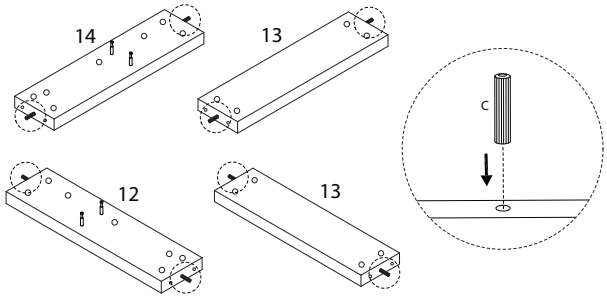

5

B
x 8

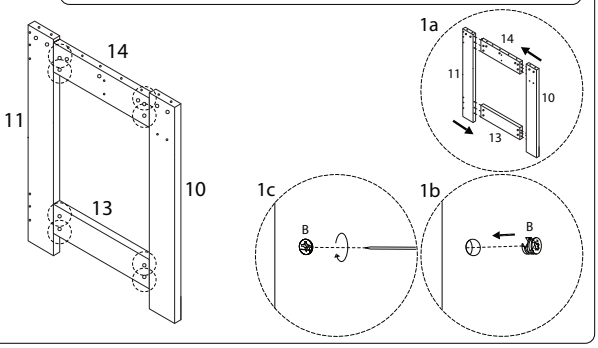

6

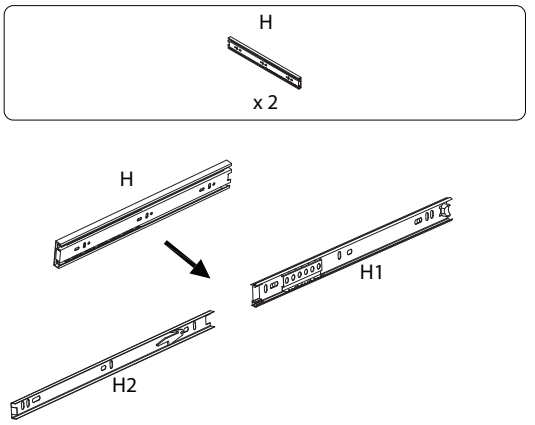

7

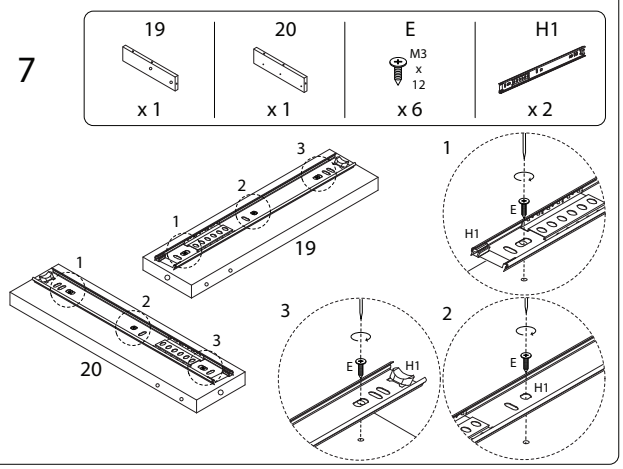

8

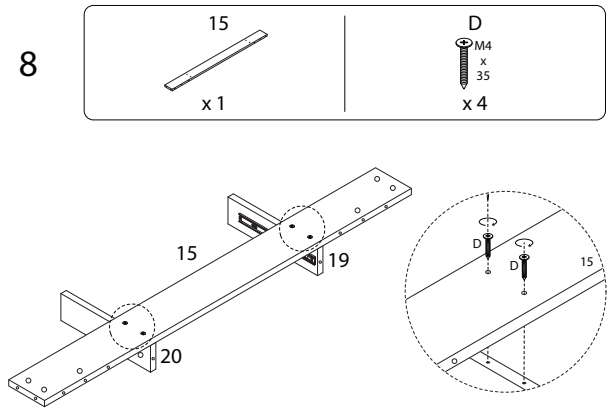

9

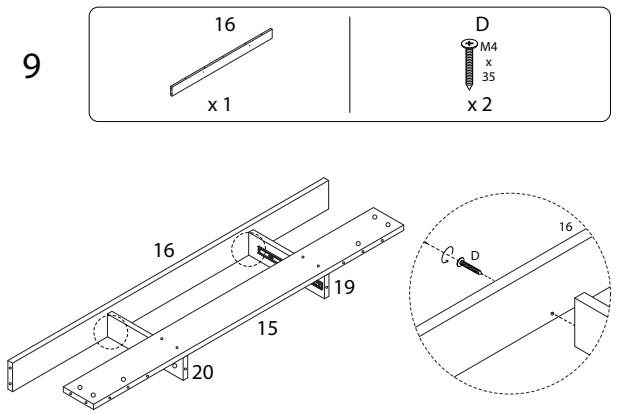

10

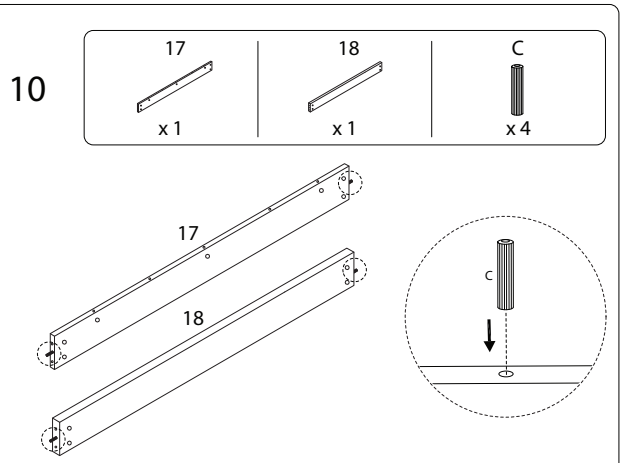

11

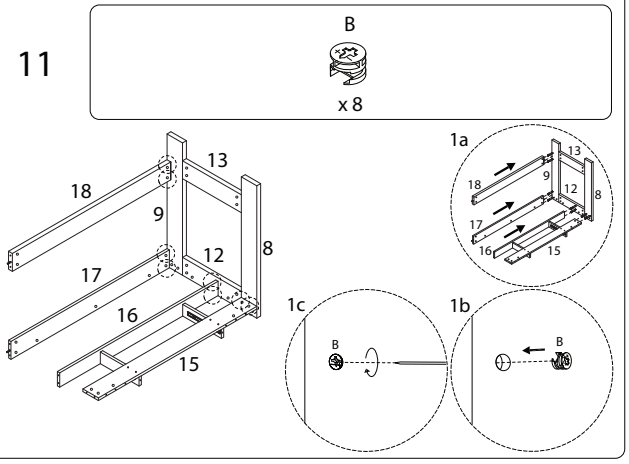

12

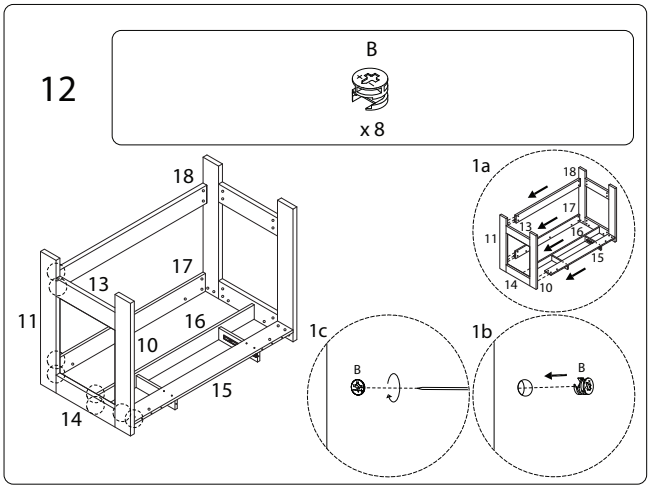

13

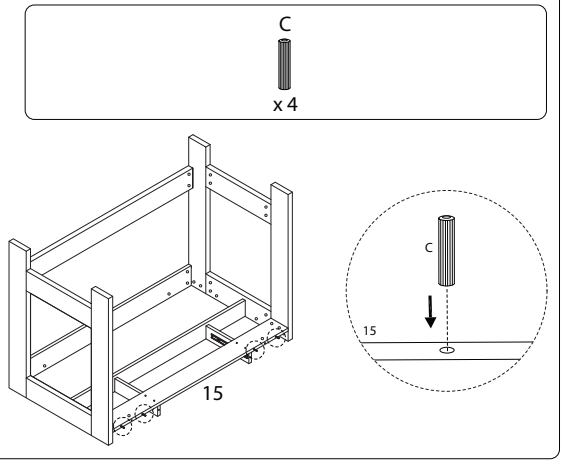

14

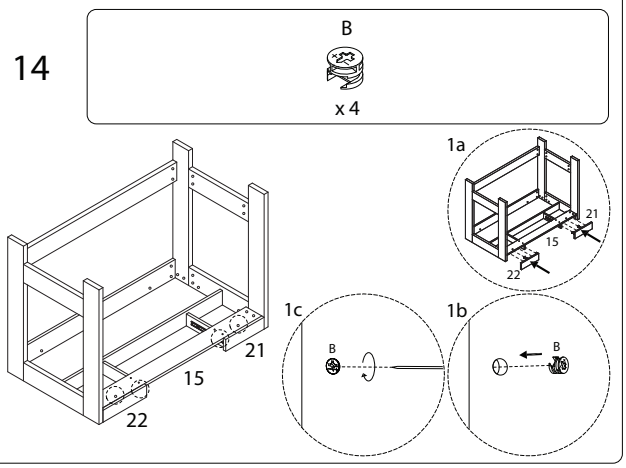

15

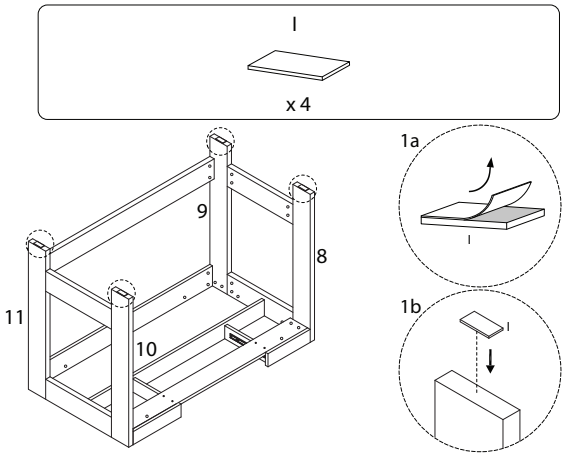

16

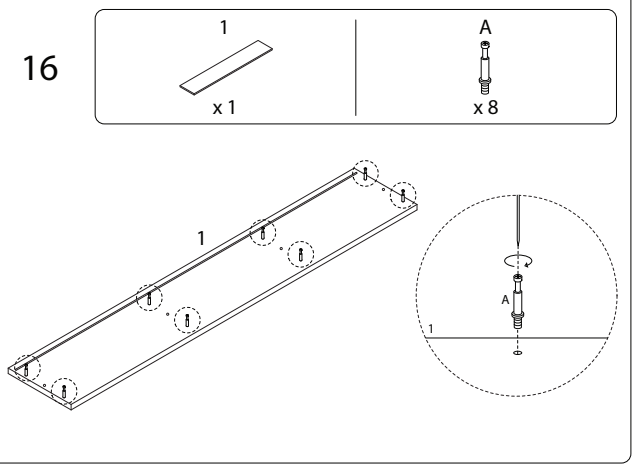

17

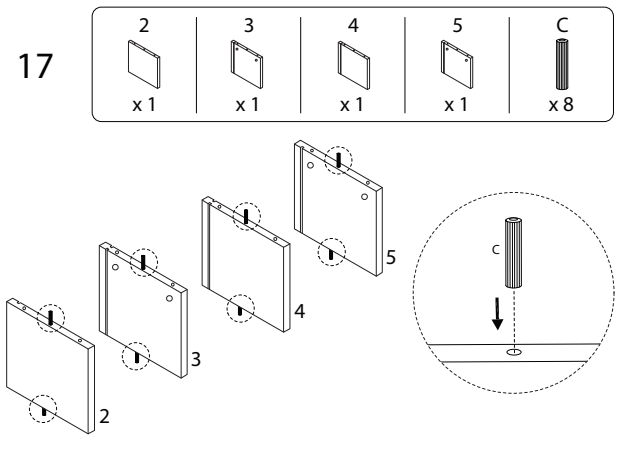

18

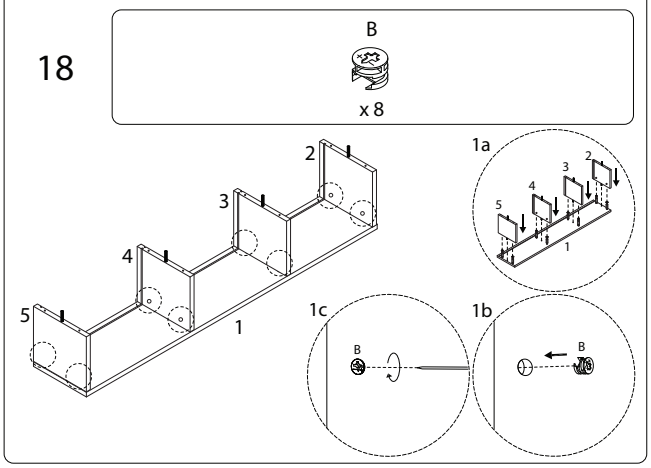

19

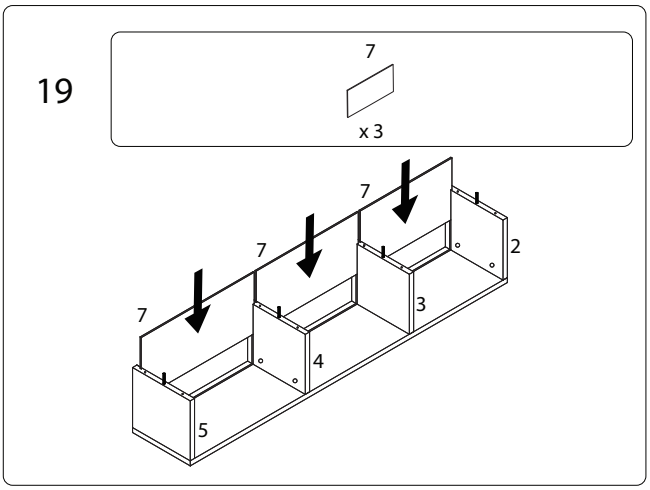

20

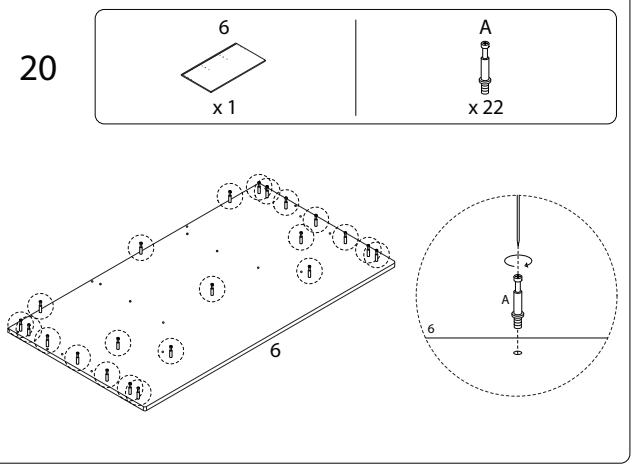

21

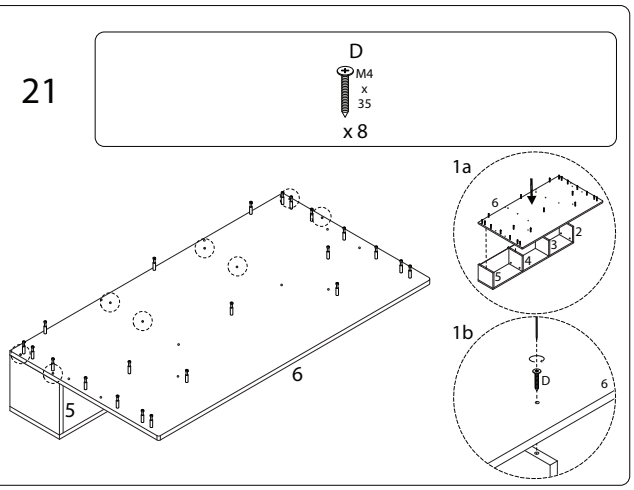

22

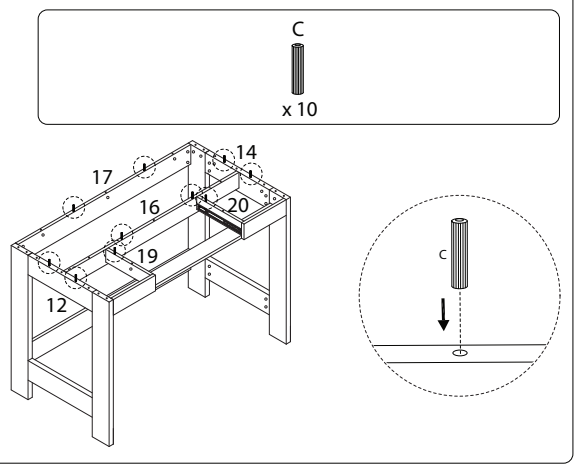

23

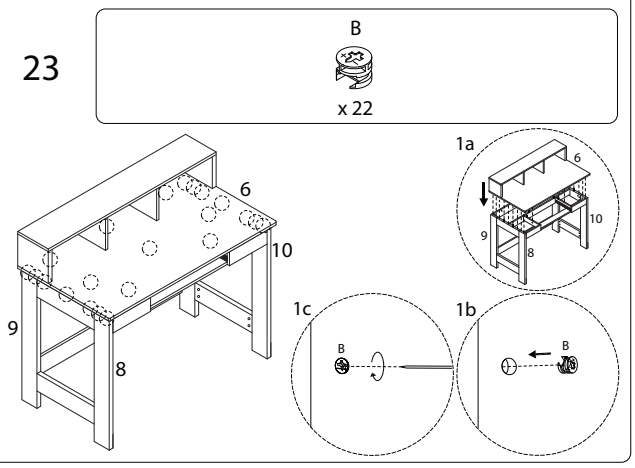

24

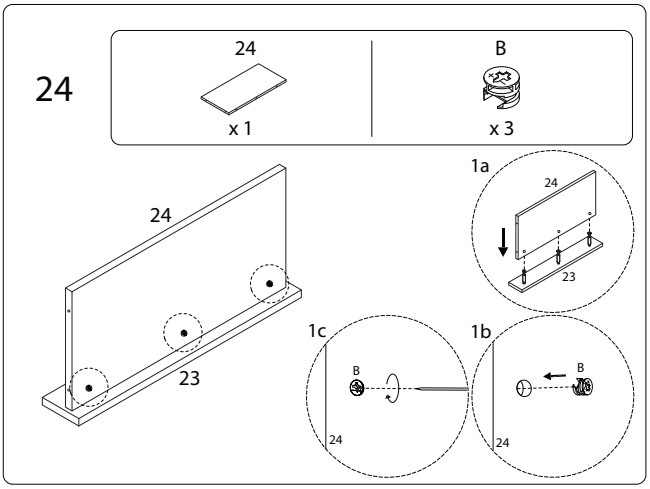

25

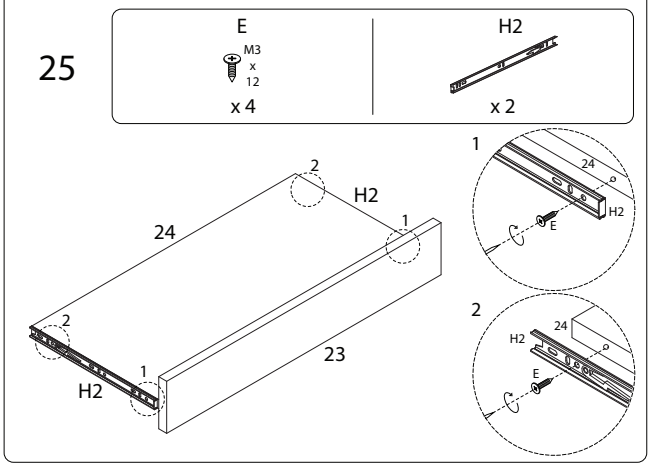

26

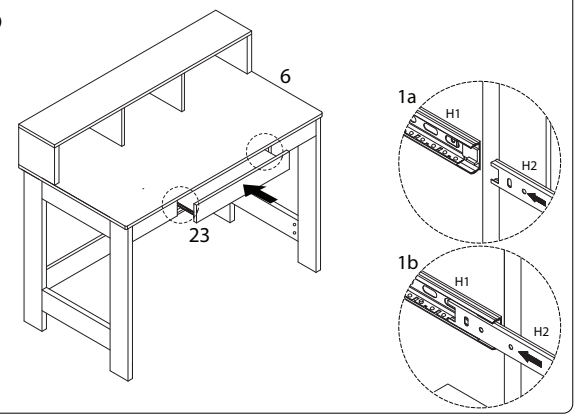

27

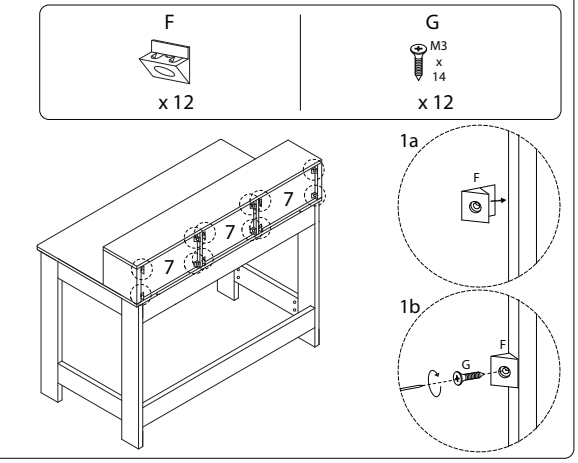
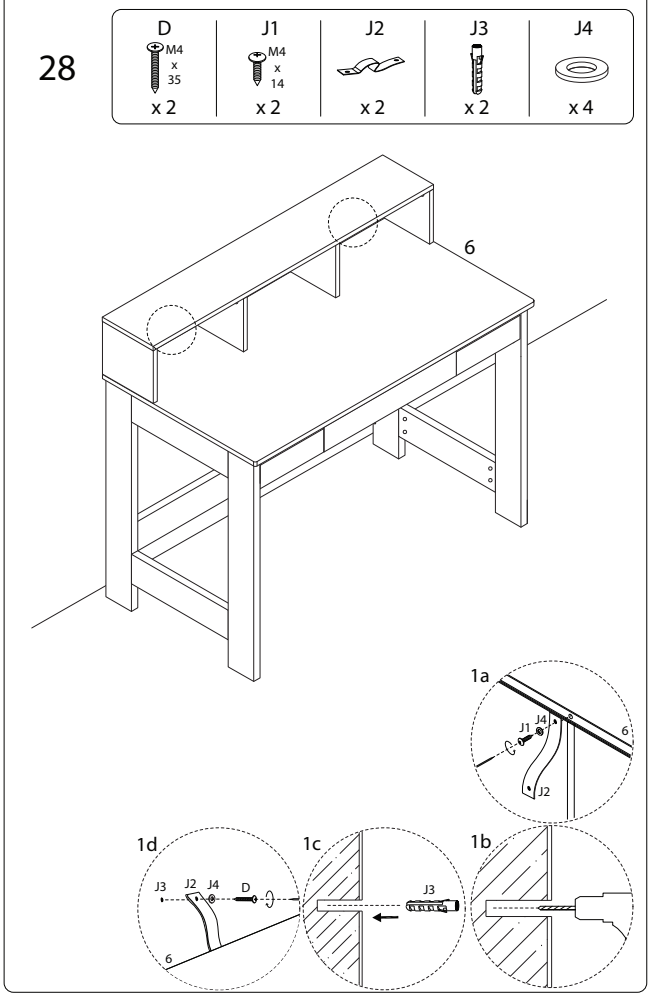
28