CRONAT

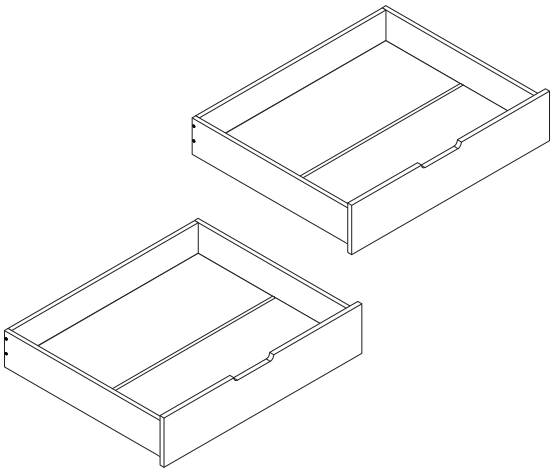

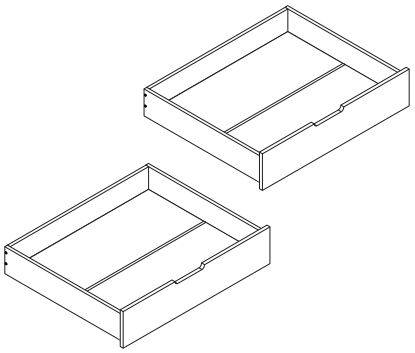

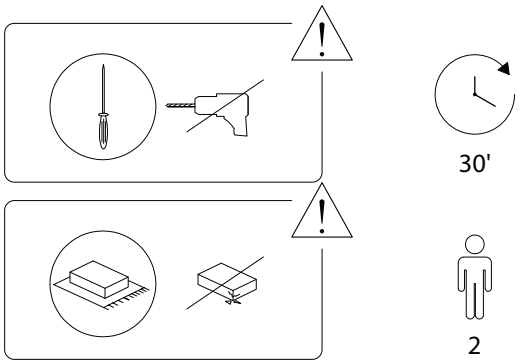

1/7

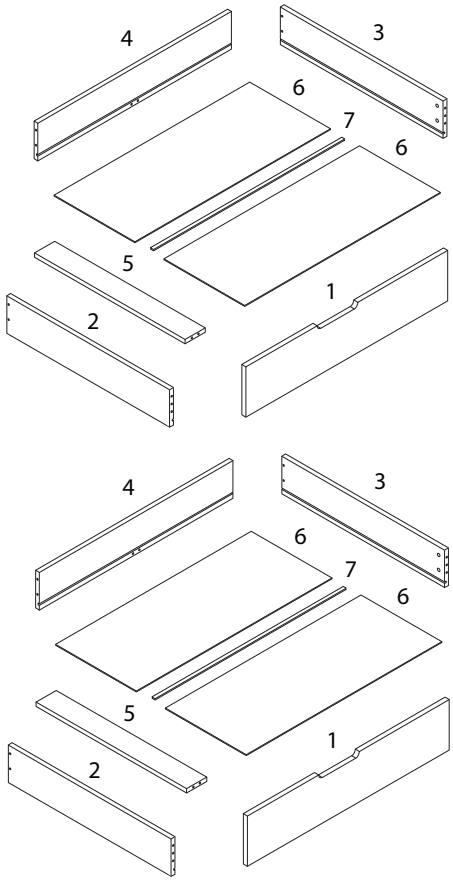

2/7

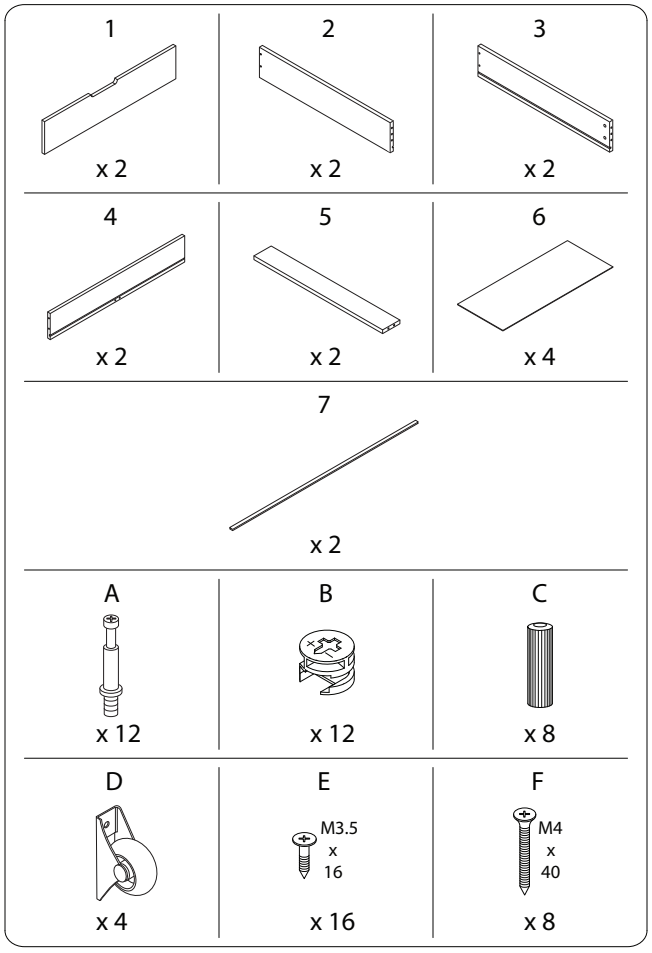

3/7

2291/CRONAT/060225/

1 x 2

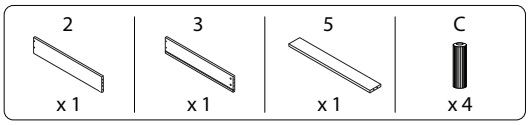

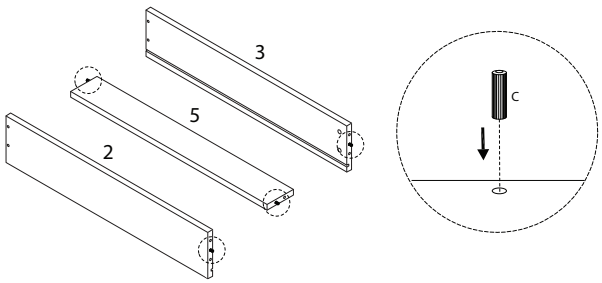

2 x 2

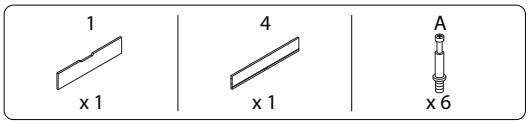

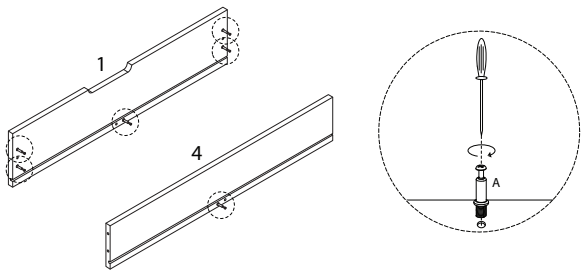

3 x 2

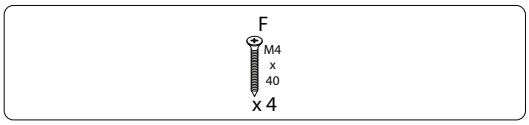

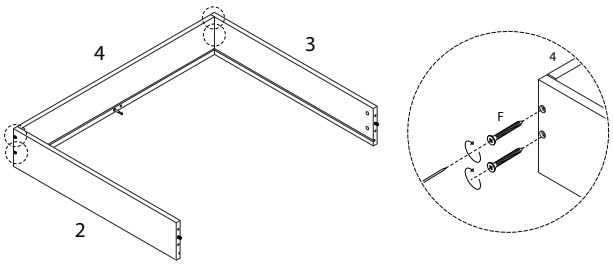

4 x 2

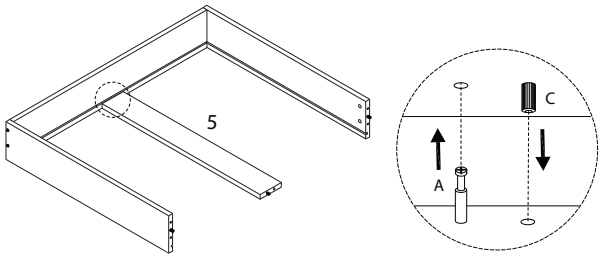

5 x 2

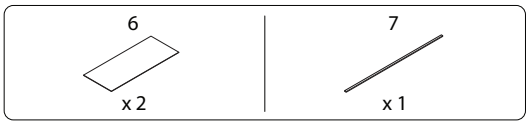

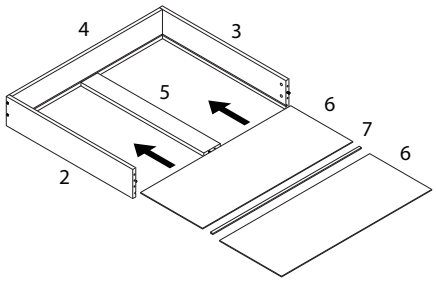

7 x 2

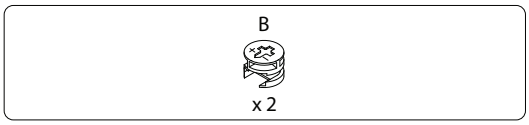

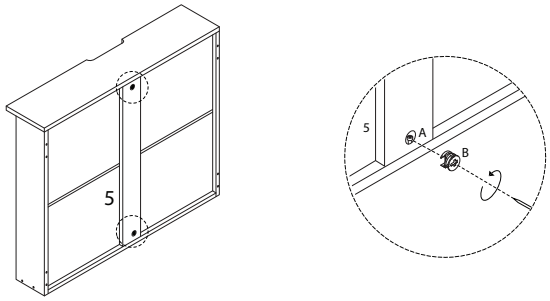

6 x 2

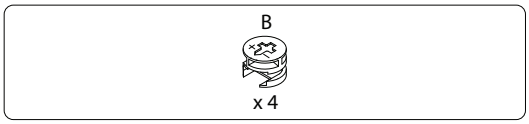

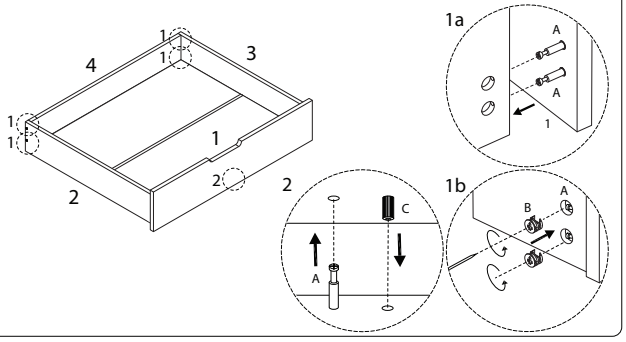

8 x 2

