EVJA

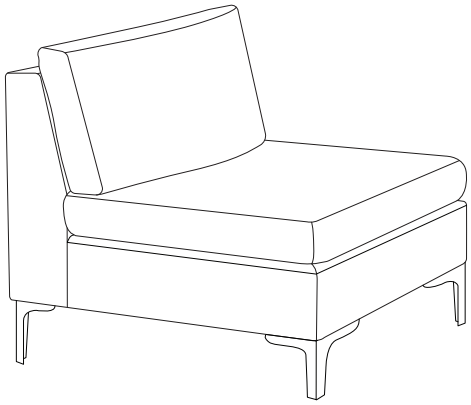

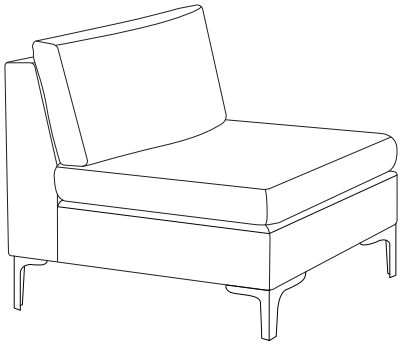

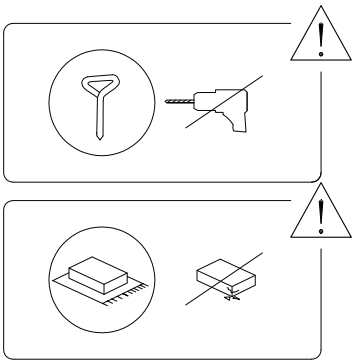

10'

1

A	B	C
	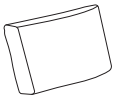	
x 1	x 1	x 4

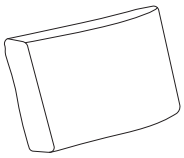

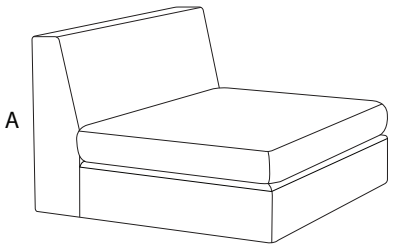

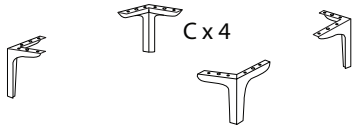

D	E	F	G
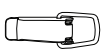			
x 2	x 2	x 24	x 1

1

A	C	F	G
			
x 1	x 4	x 16	x 1

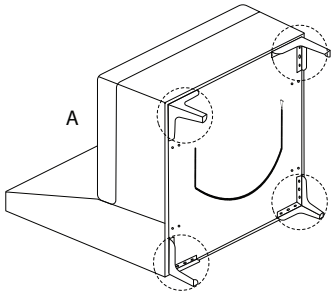

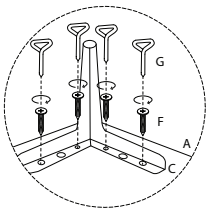

2

D	E	F	G
			
x 2	x 2	x 8	x 1

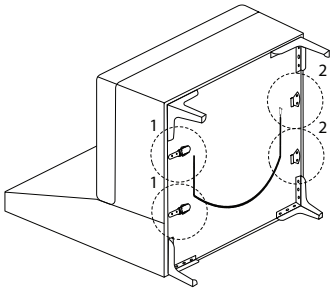

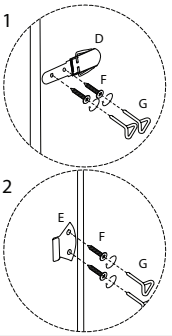

3

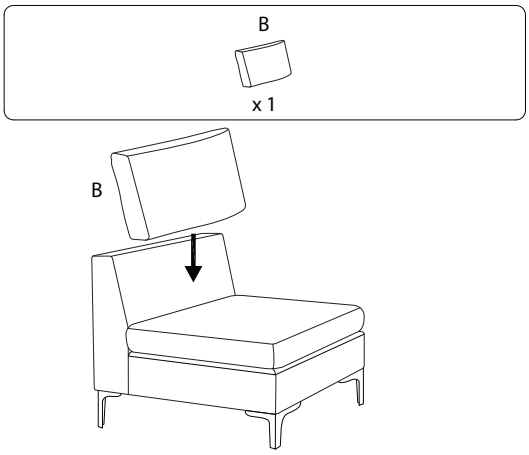

!

