QUILPIE

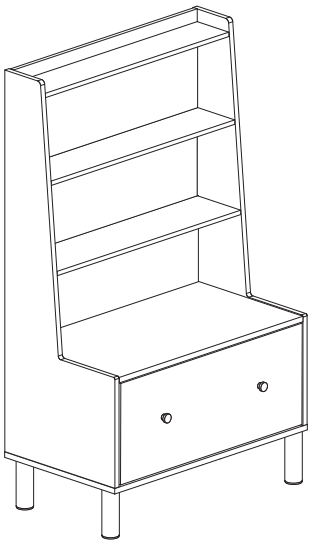

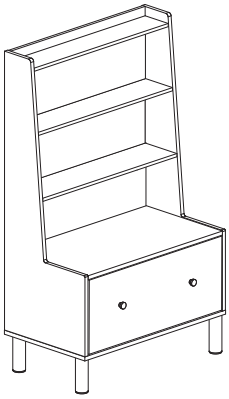

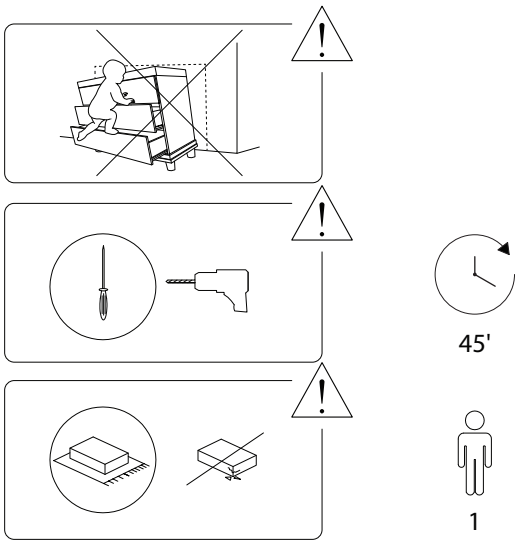
45'
1

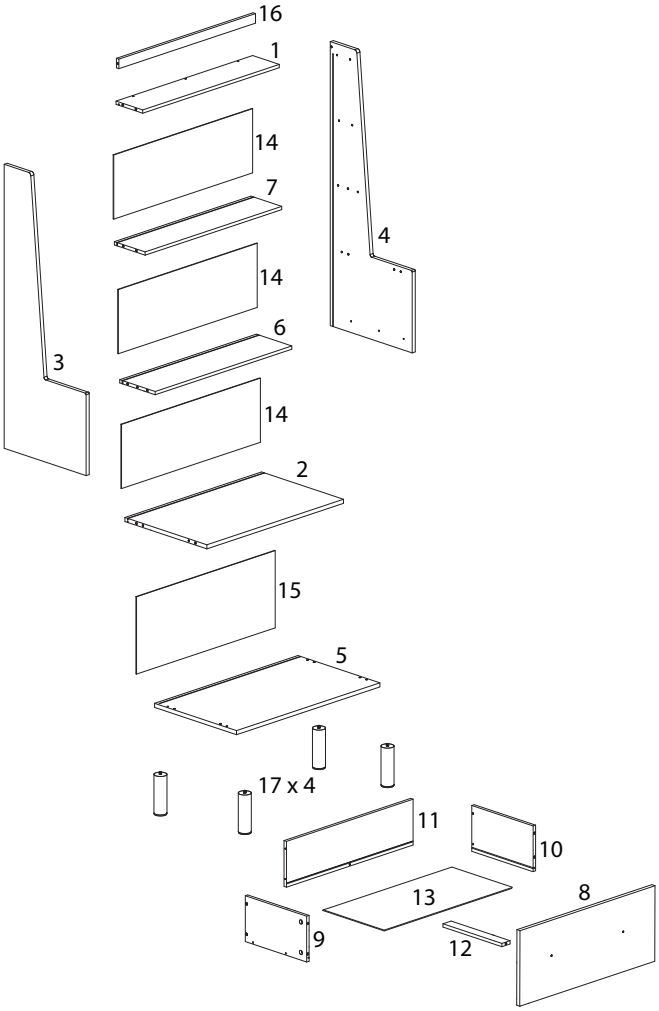
16
1
14
7
14
6
14
2
15
5
17 x 4
11
10
13
8
9
12
4
3

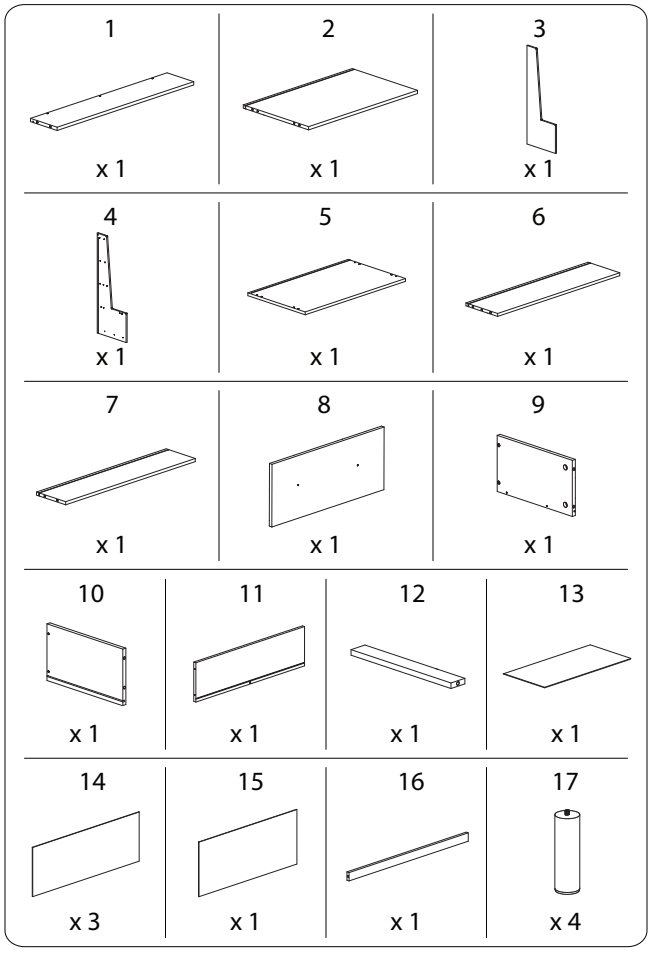
1
x 1
2
x 1
3
x 1
4
x 1
5
x 1
6
x 1
7
x 1
8
x 1
9
x 1
10
x 1
11
x 1
12
x 1
13
x 1
14
x 3
15
x 1
16
x 1
17
x 4

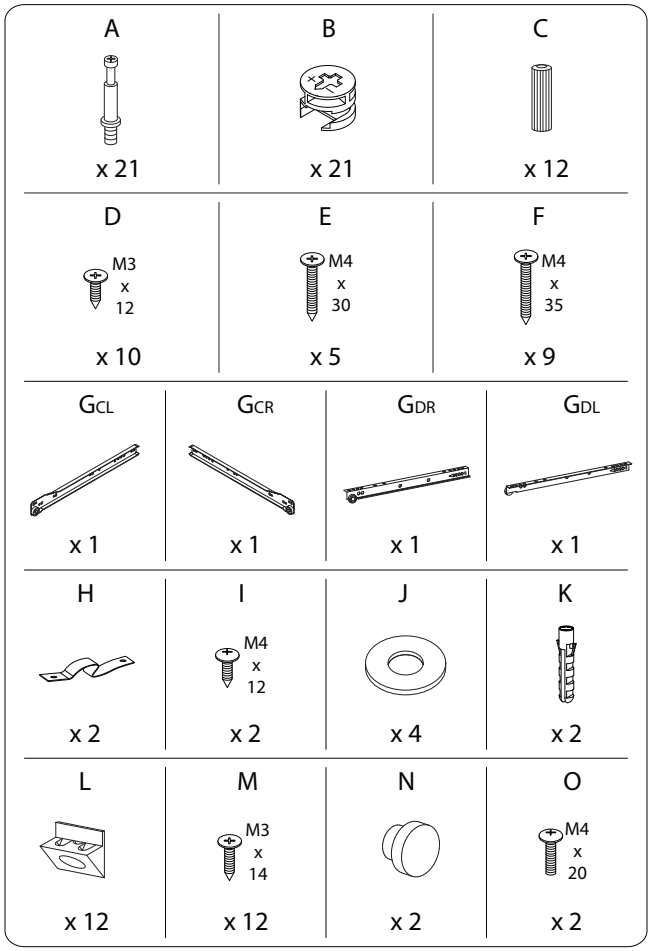
A
x 21
B
x 21
C
x 12
D
M3 x 12
x 10
E
M4 x 30
x 5
F
M4 x 35
x 9
GCL
x 1
GCR
x 1
GDR
x 1
GDL
x 1
H
x 2
I
M4 x 12
x 2
J
x 4
K
x 2
L
x 12
M
M3 x 14
x 12
N
x 2
O
M4 x 20
x 2

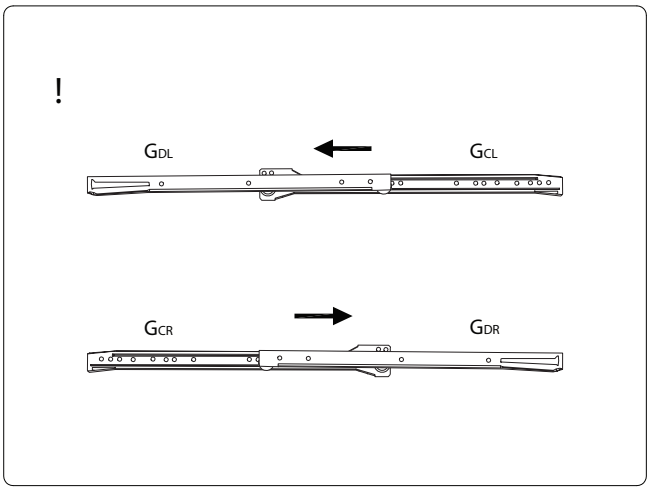
!
GDL
GCL
GCR
GDR

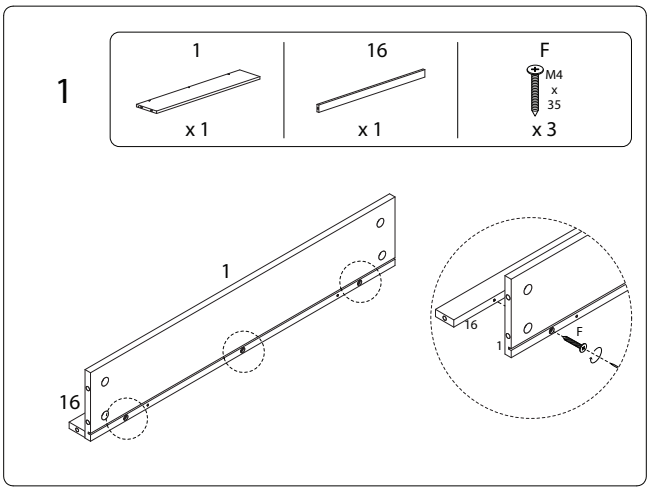
1
1
x 1
16
x 1
F
M4 x 35
x 3
1
16
16
1
F

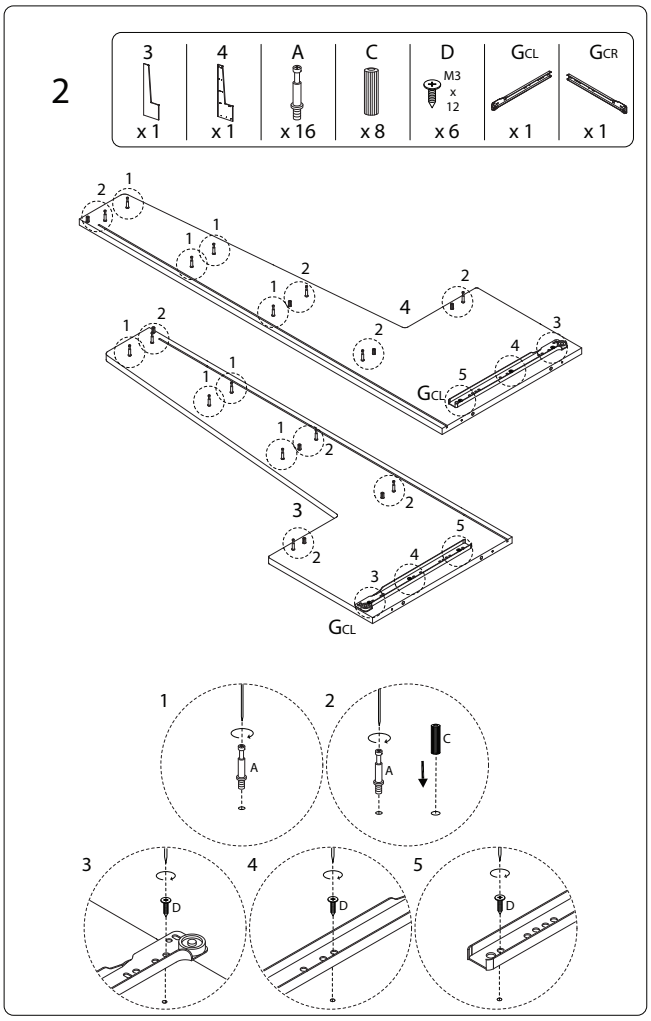
2
3
x 1
4
x 1
A
x 16
C
x 8
D
M3 x 12
x 6
GCL
x 1
GCR
x 1
GCL
GCL
A
C
D
D
D

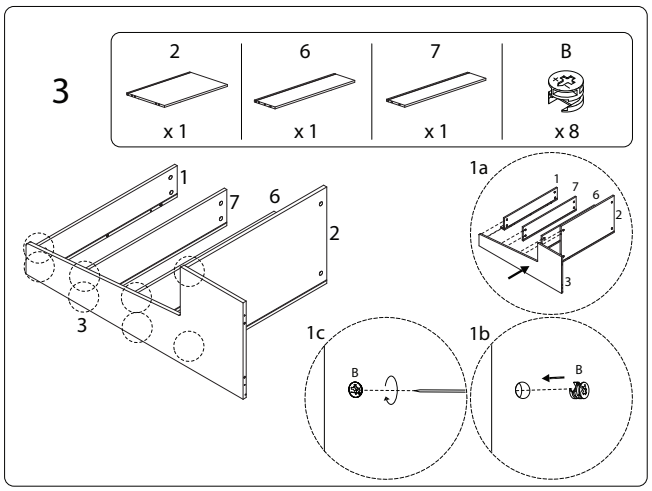
3
2
x 1
6
x 1
7
x 1
B
x 8
1a
1c
1b
B
B

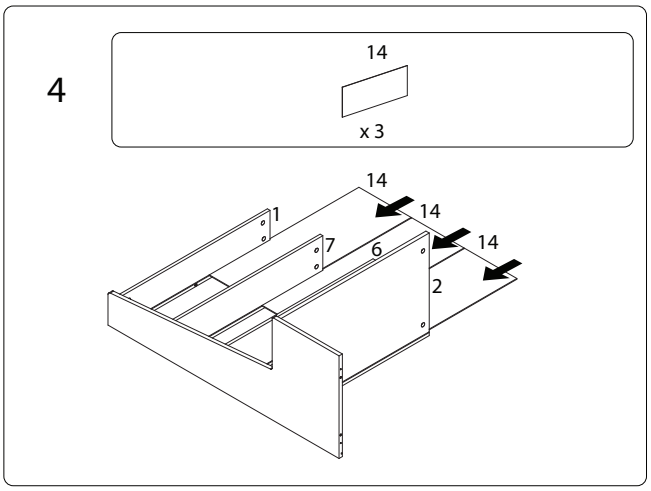
4
14
x 3
14
14
14

5

B

x 8

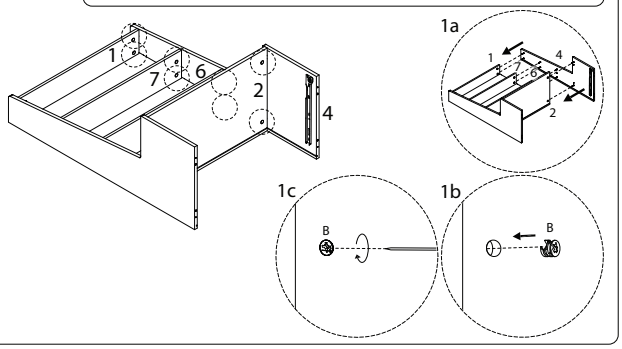

6

15

x 1

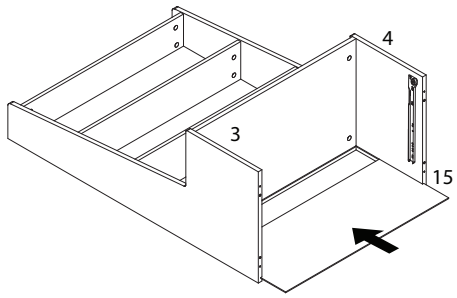

7

C

x 4

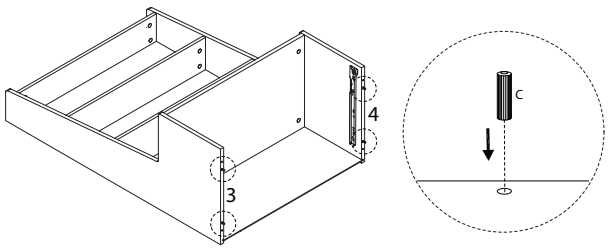

8

5

x 1

F

M4 x 35

x 4

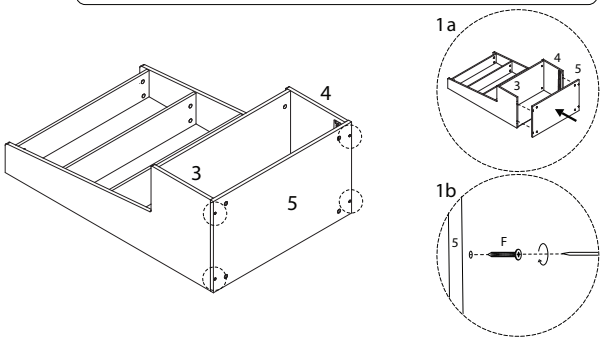

9

17

x 4

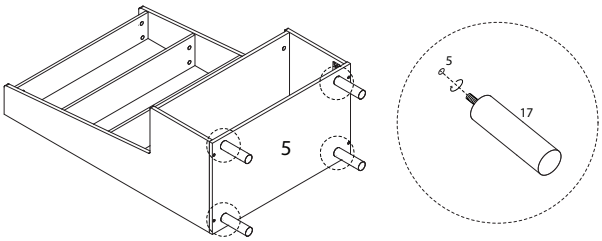

10

9

x 1

10

x 1

11

x 1

12

x 1

E

M4 x 30

x 5

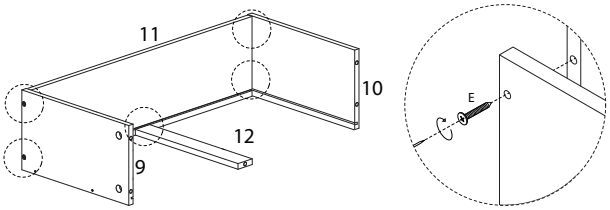

11

13

x 1

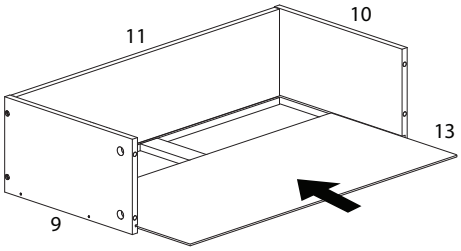

12

8

x 1

A

x 5

N

x 2

O

M4 x 20

x 2

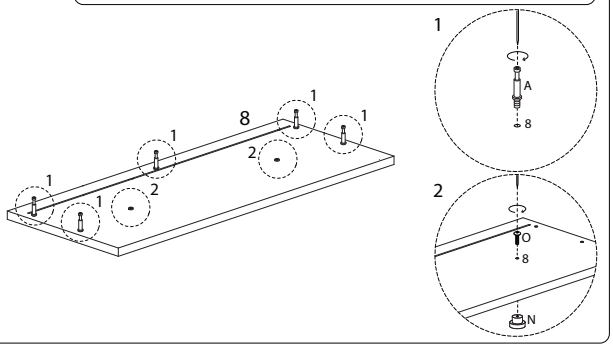

13

B
x 4

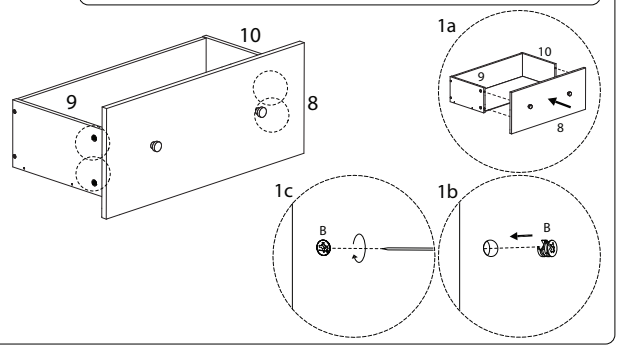

14

D	GDR	GDL
M3 x 12		
x 4	x 1	x 1

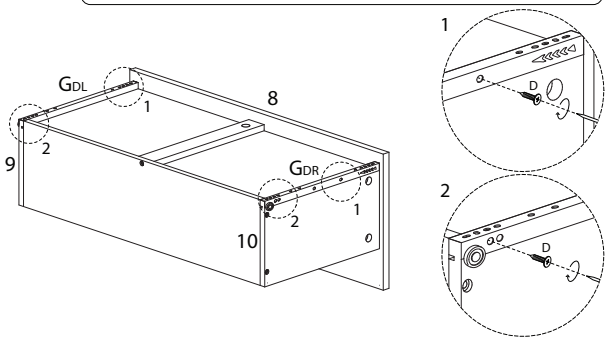

15

B
x 1

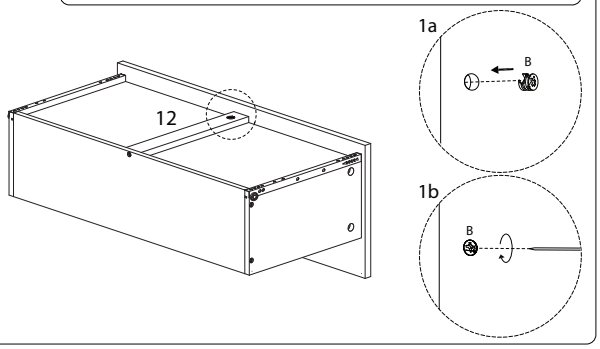

16

L	M
x 12	M3 x 14 x 12

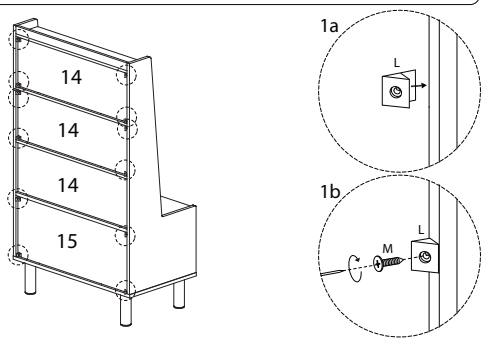

17

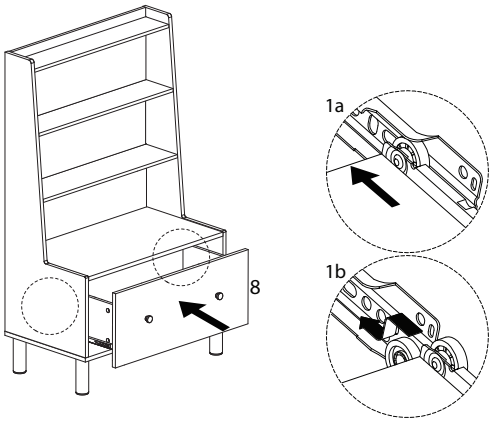

18

H	I	J
	M4 x 12	
x 2	x 2	x 2

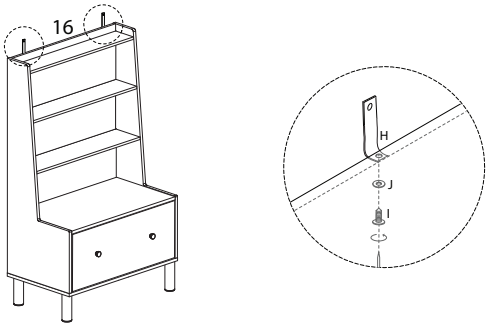

19
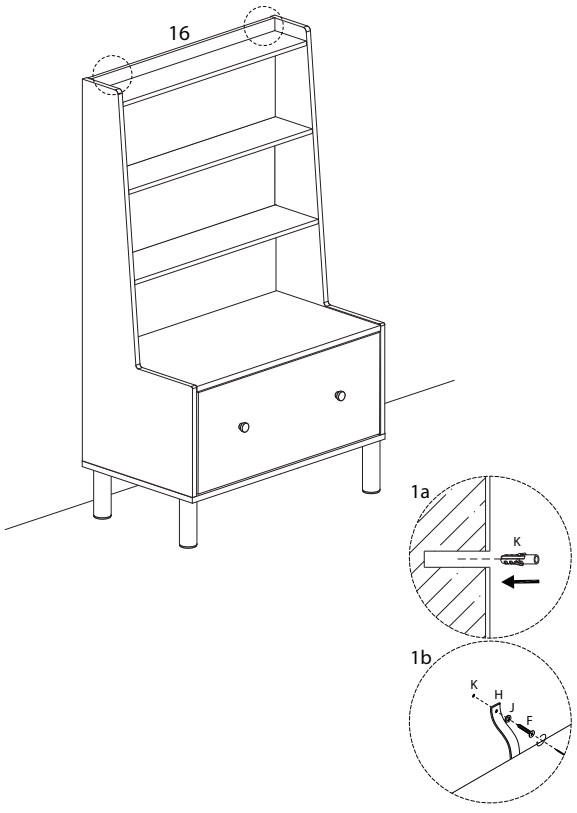
F	J	K
M4 x 35		
x 2	x 2	x 2