CAROGA





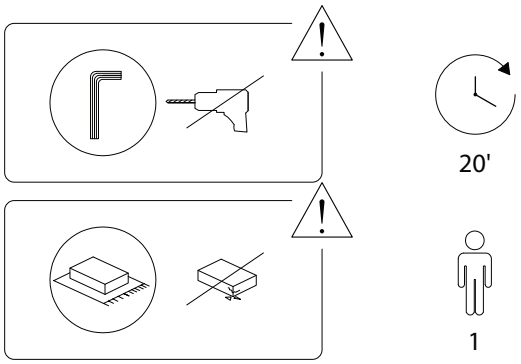

Beliani

Beliani
2463/CAROGA/230625/

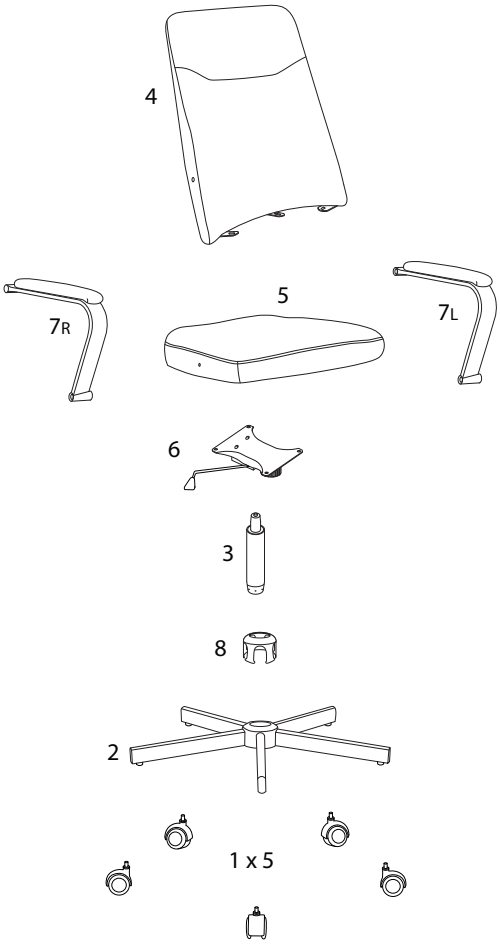

Beliani
2463/CAROGA/230625/

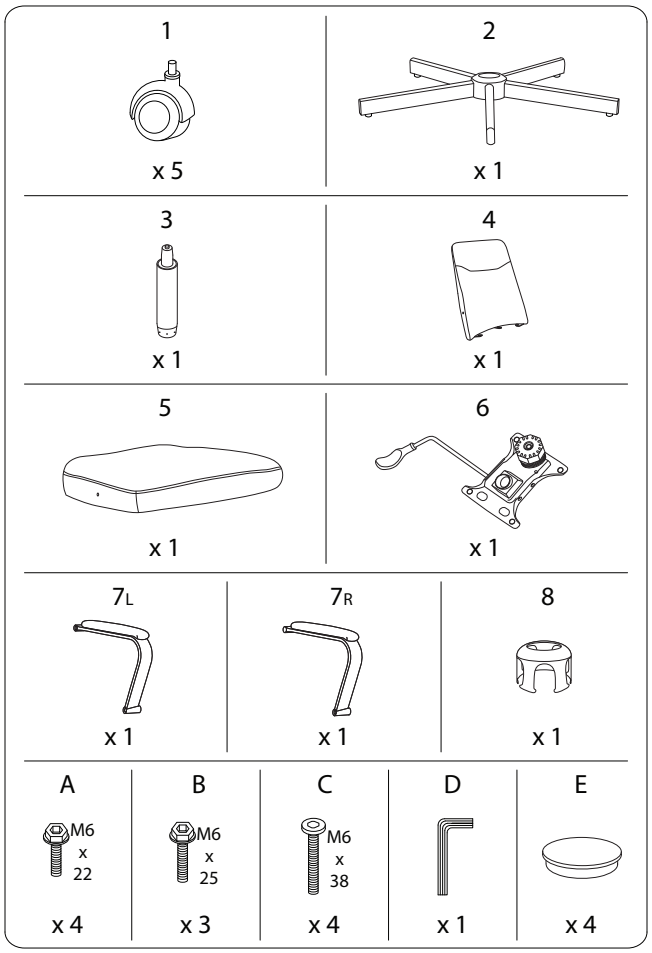

Beliani
2463/CAROGA/230625/

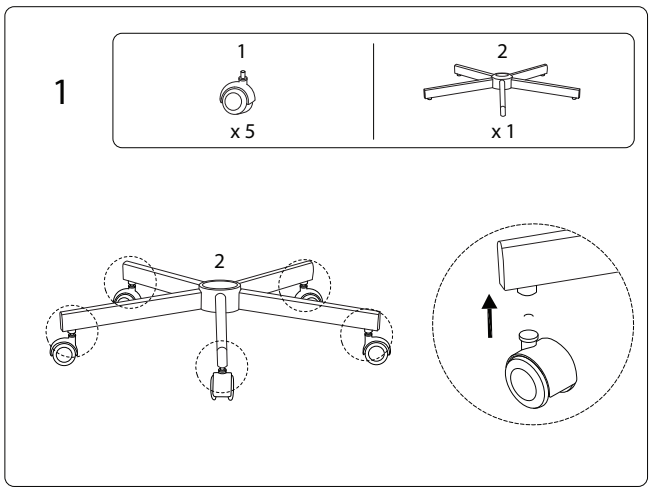
1
1
x 5
2
x 1
2

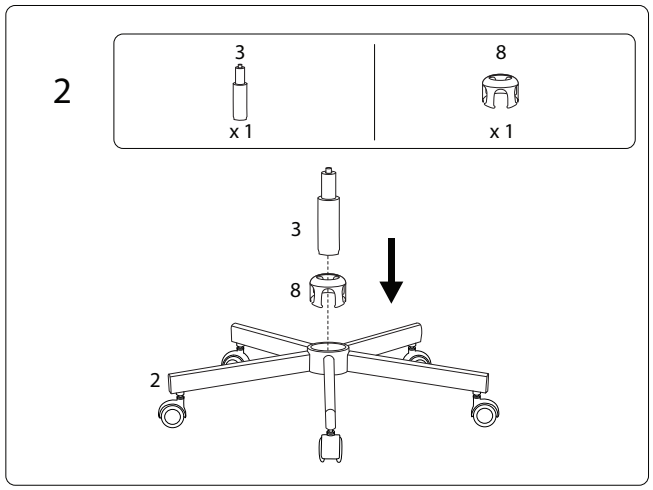
2
3
x 1
8
x 1
3
8
2

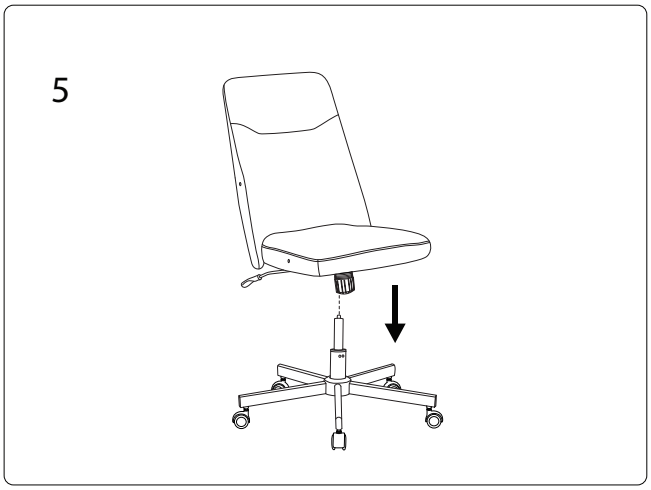
5

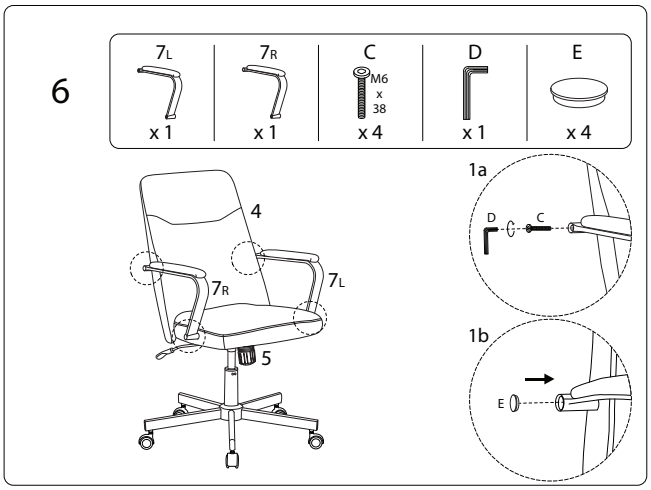
6
7L
x 1
7R
x 1
C
M6
x
38
x 4
D
x 1
E
x 4
4
7R
7L
5
1a
D
C
1b
E

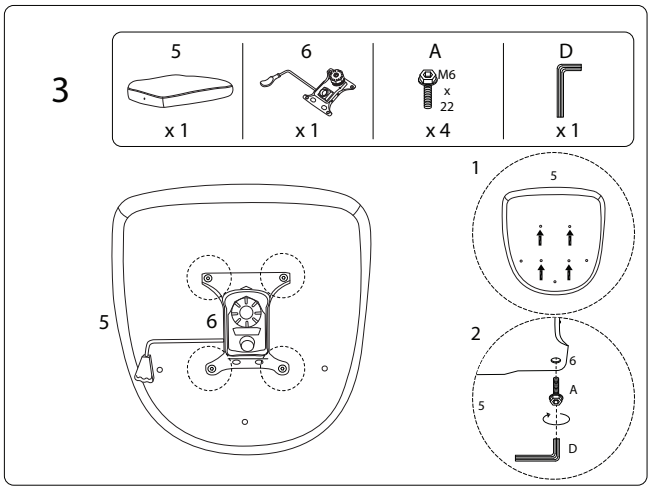
3
5
x 1
6
x 1
A
M6
x
22
x 4
D
x 1
1
5
5
6
2
6
A
5
D

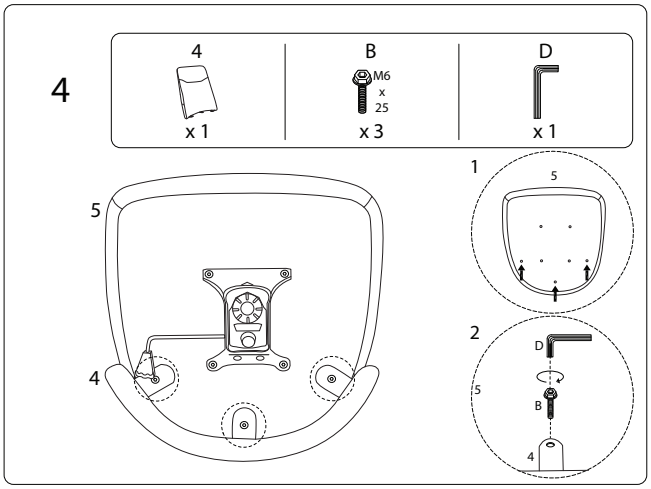
4
4
x 1
B
M6
x
25
x 3
D
x 1
1
5
5
4
2
D
5
B
4

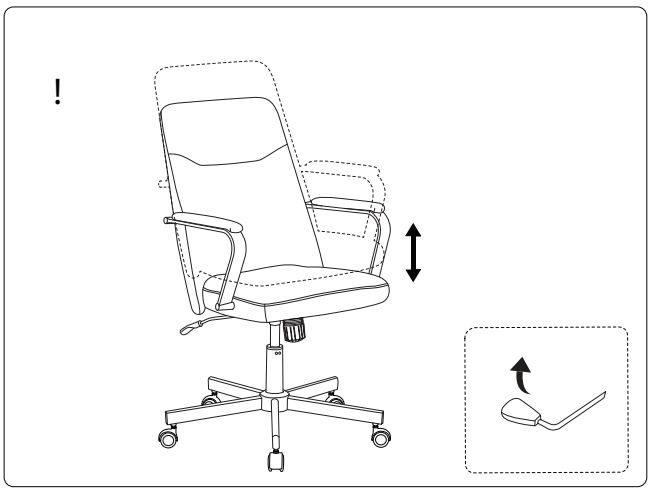
!

Schweiz, Suisse, Svizzera
mail@beliani.ch
tel. +41 43 508 22 33

Nederland
mail@beliani.nl
tel. +31 38 744 0103

Norge
mail@beliani.no
tel. +47 21 56 99 75

Slovensko
mail@beliani.sk
tel. +421 232784612

Deutschland
mail@beliani.de
tel. +49 221 6778 9927

France
mail@beliani.fr
tel. +33 1 84 79 84 99

Sverige
mail@beliani.se
tel. +46 8 446 891 58

Magyarország
mail@beliani.hu
tel. +36 (1) 211 4034

Österreich
mail@beliani.at
tel. +43 1 375 00 57

Italia
mail@beliani.it
tel. +39 06 56548602

Suomi
mail@beliani.fi
tel. +358 9 4245 0464

România
mail@beliani.ro
tel. +40 316 300 677

United Kingdom
mail@beliani.co.uk
tel. +44 20 3318 8222

España
mail@beliani.es
tel. +34 932 714 061

Danmark
mail@beliani.dk
tel. +45 89 88 10 86

België, Belgique
mail@beliani.be
tel. +32 28085614

Polska
mail@beliani.pl
tel. +48 91 350 83 60

Portugal
mail@beliani.pt
tel. +351 22 145 07 45

Česká Republika
mail@beliani.cz
tel. +420 228881514

Representative in EU:

Beliani Kundendienst GmbH
Leverkusener Str. 31
16303 Schwedt
Germany







