CARDIGAN

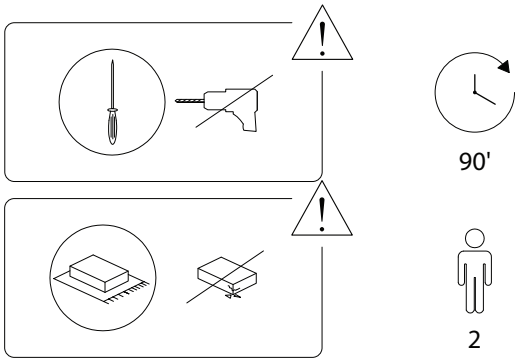

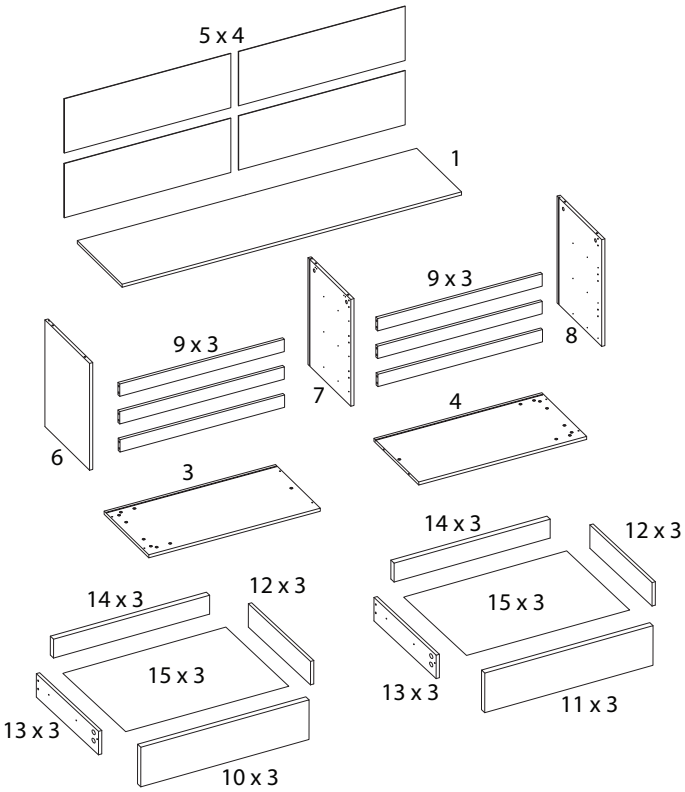

1	3	4	5
x 1	x 1	x 1	x 4

6	7
x 1	x 1
8	9
x 1	x 6
10	11
x 3	x 3
12	13
x 6	x 6
14	15
x 6	x 6

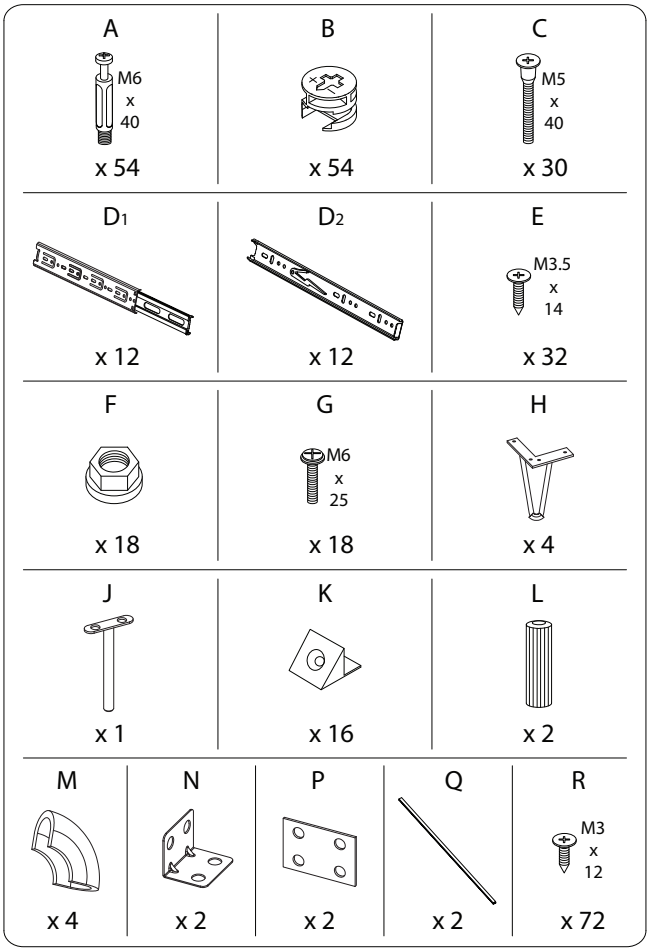
A
M6 x 40
x 54
B
x 54
C
M5 x 40
x 30
D1
x 12
D2
x 12
E
M3.5 x 14
x 32
F
x 18
G
M6 x 25
x 18
H
x 4
J
x 1
K
x 16
L
x 2
M
x 4
N
x 2
P
x 2
Q
x 2
R
M3 x 12
x 72

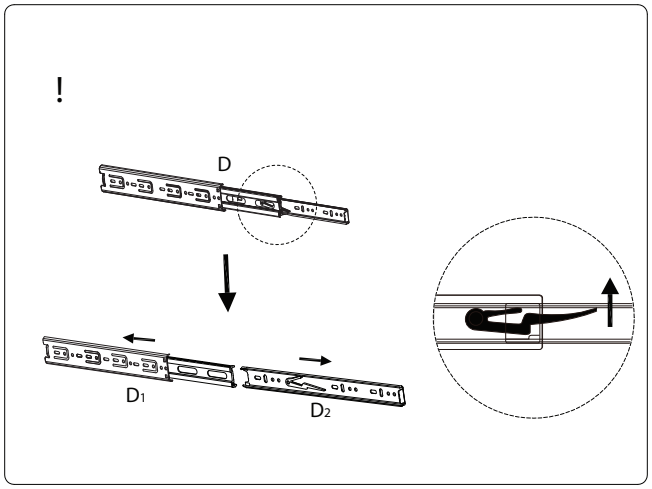
!
D
D1
D2

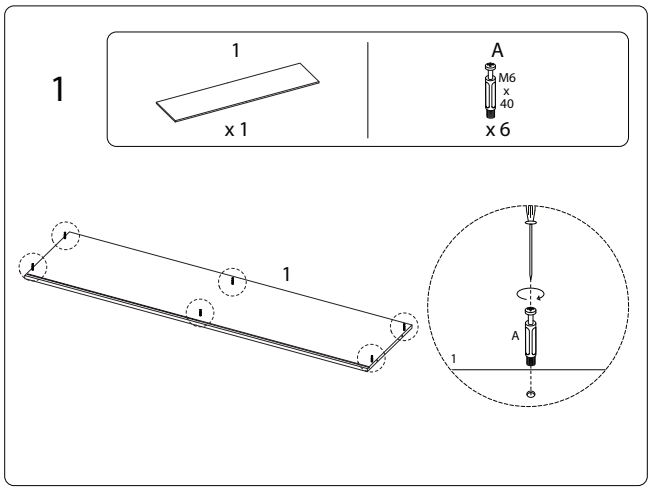
1
1
x 1
A
M6 x 40
x 6
1
A
1

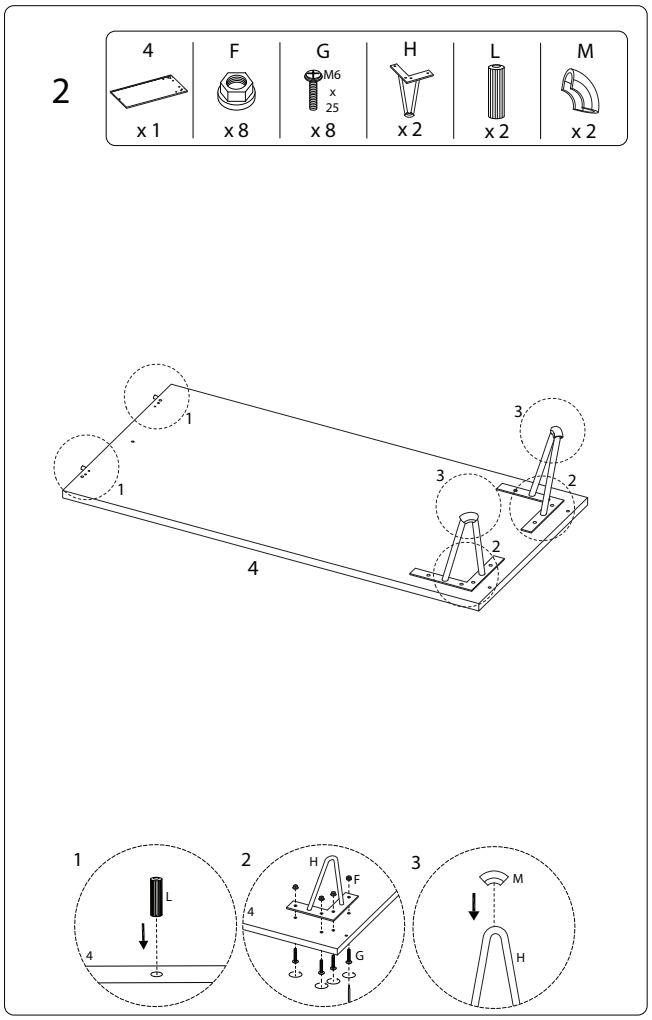
2
4
x 1
F
x 8
G
M6 x 25
x 8
H
x 2
L
x 2
M
x 2
1
1
3
3
2
2
4
1
L
4
2
H
F
4
G
3
M
H

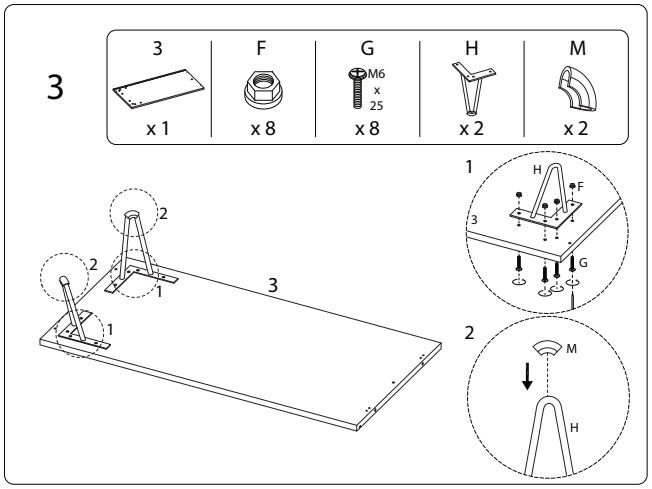
3
3
x 1
F
x 8
G
M6 x 25
x 8
H
x 2
M
x 2
2
2
1
1
3
1
H
F
3
G
2
M
H

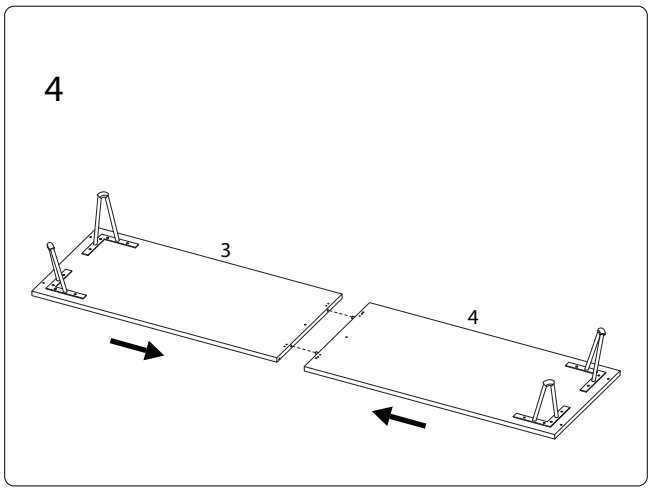
4
3
4

5

E	F	G	J	P
M3.5 x 14		M6 x 25		
x 8	x 2	x 2	x 1	x 2

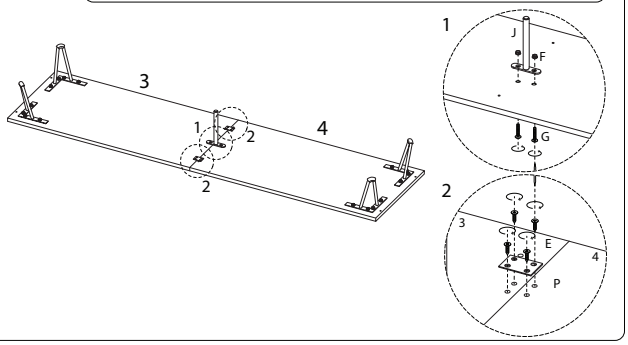

6 x 3

10	11	A
		M6 x 40
x 1	x 1	x 8

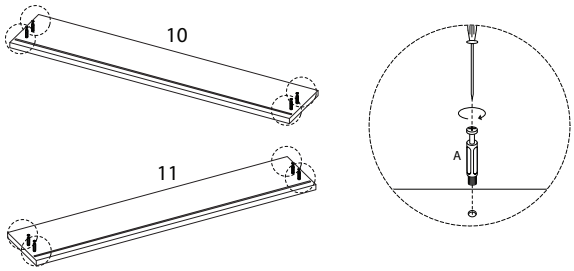

7

6	8	A	D1	R
		M6 x 40		M3 x 12
x 1	x 1	x 12	x 6	x 18

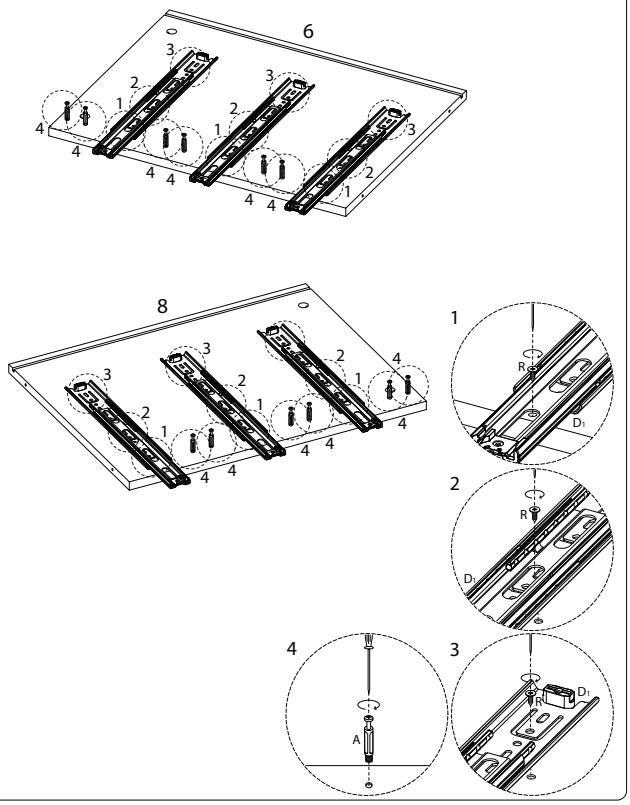

8

7	A	D1	E	N	R
	M6 x 40		M3.5 x 14		M3 x 12
x 1	x 6	x 3	x 4	x 2	x 9

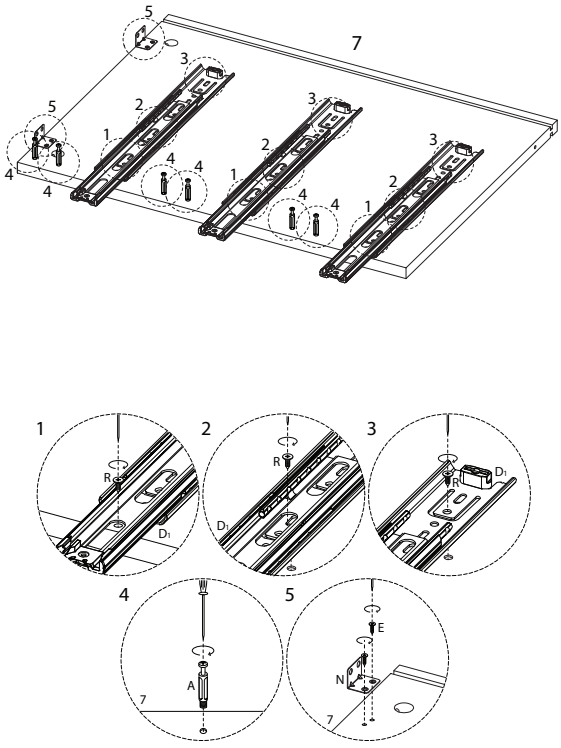

9

A	D1	R
M6 x 40		M3 x 12
x 6	x 3	x 9

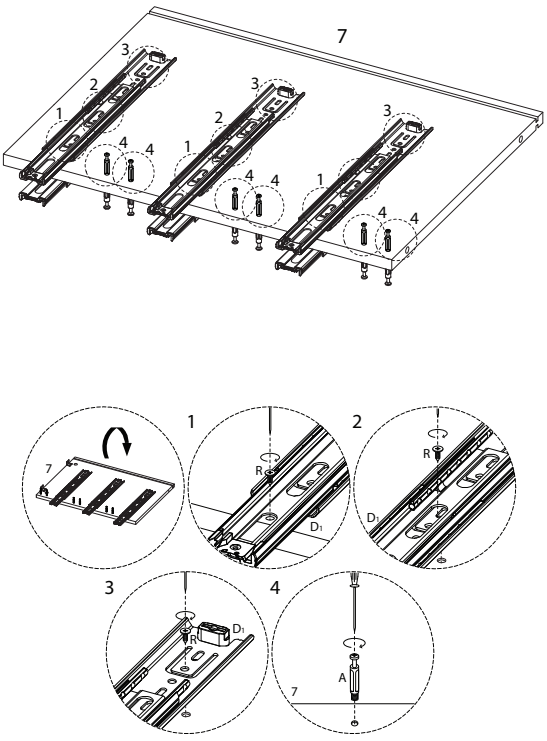

10

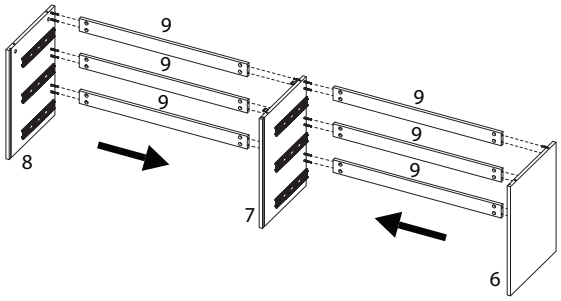

11

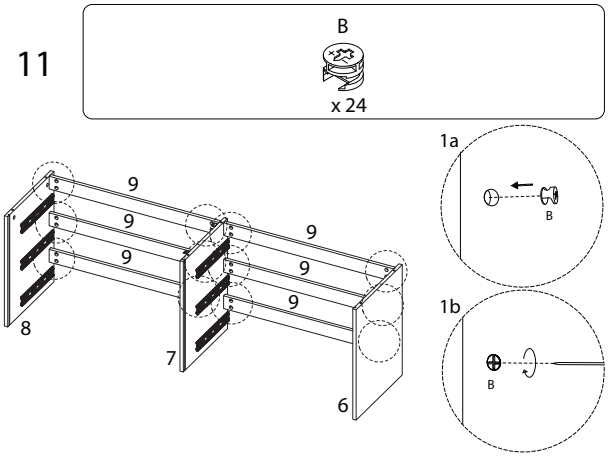

12

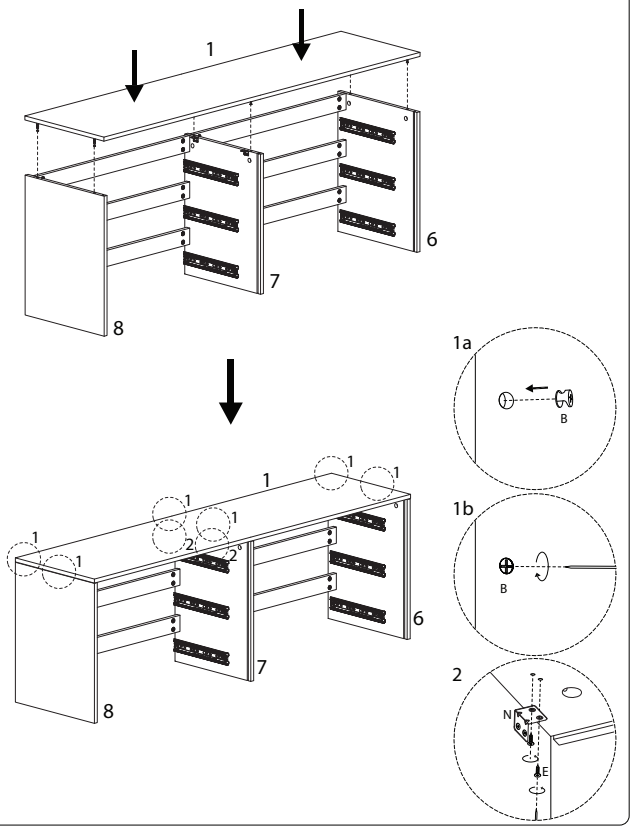

13

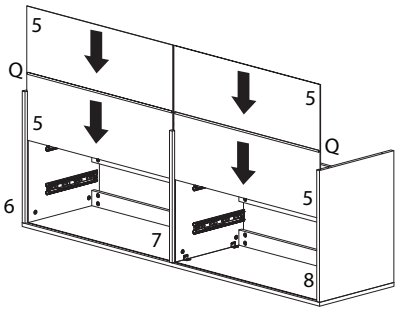

14

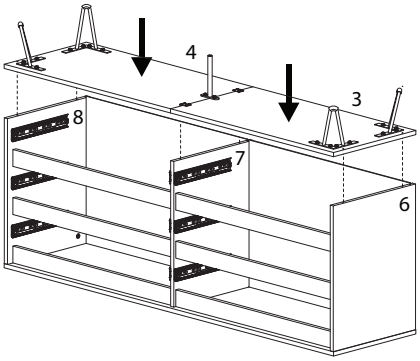

15

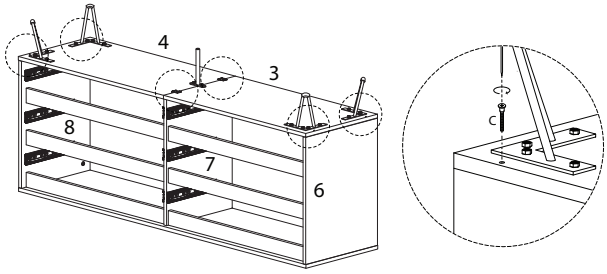

16 x 6

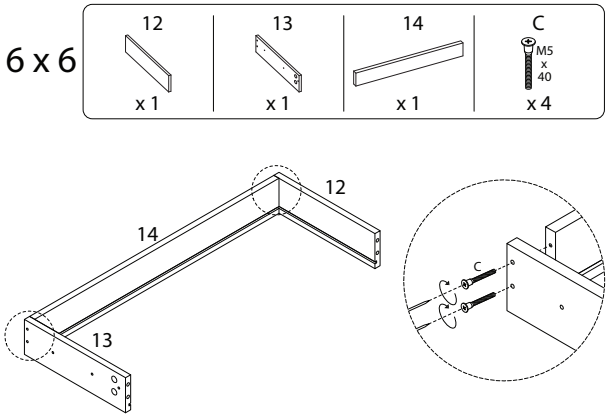

17 x 3

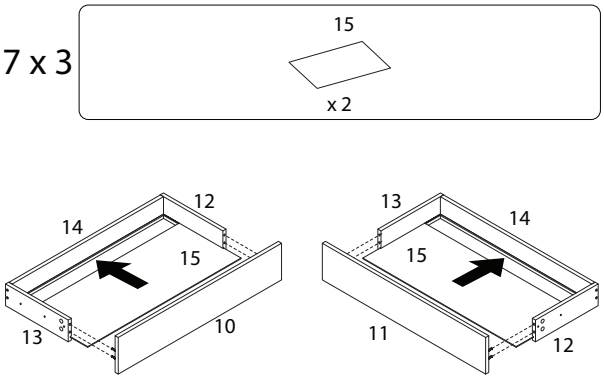

18 x 3

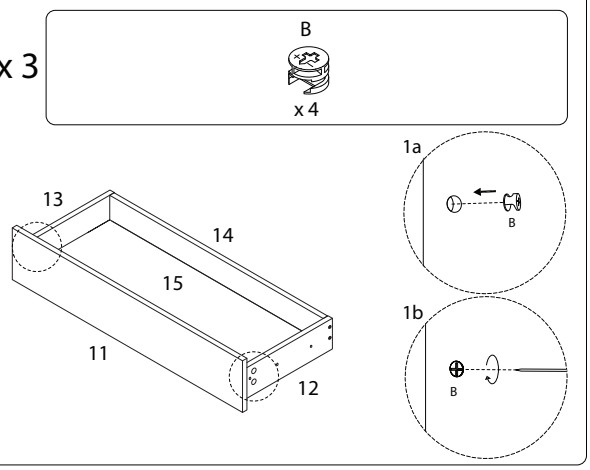

19 x 3

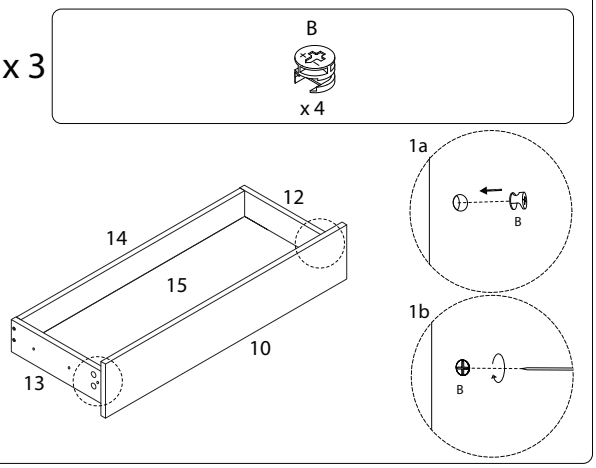

20 x 3

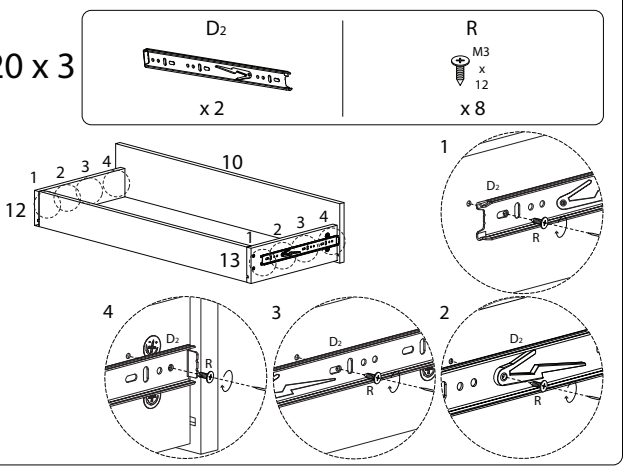

21 x 3

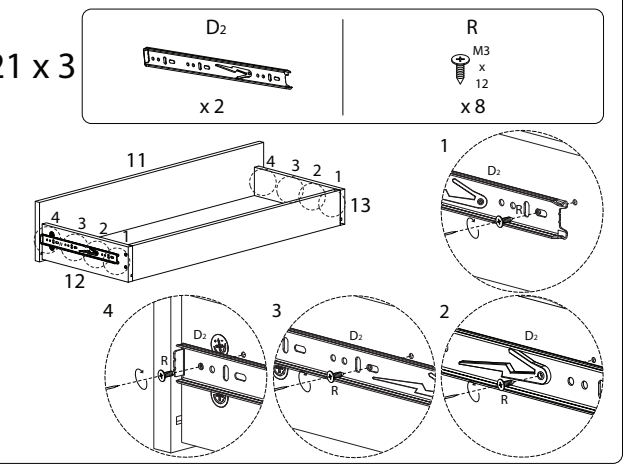

23

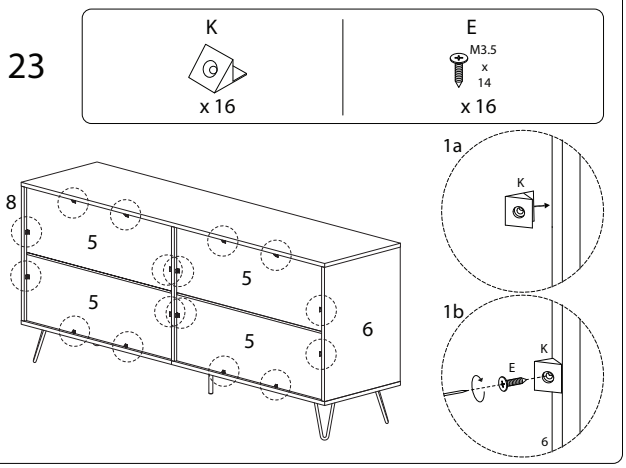
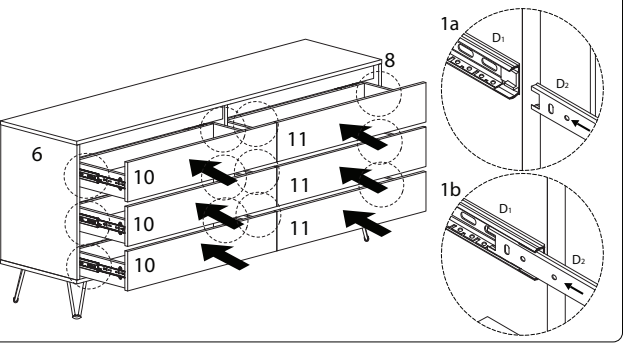
22