MAYBEE

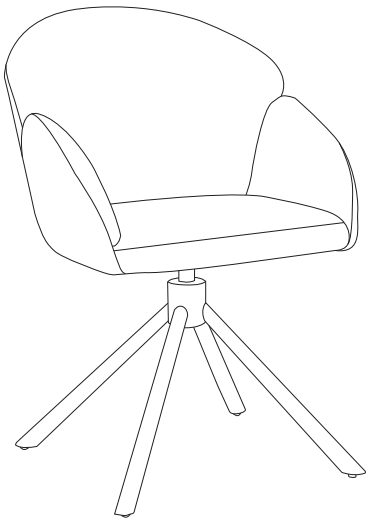

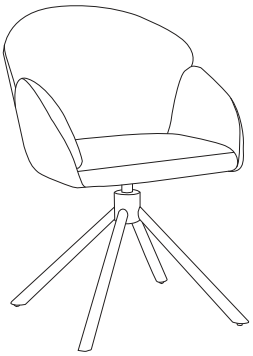

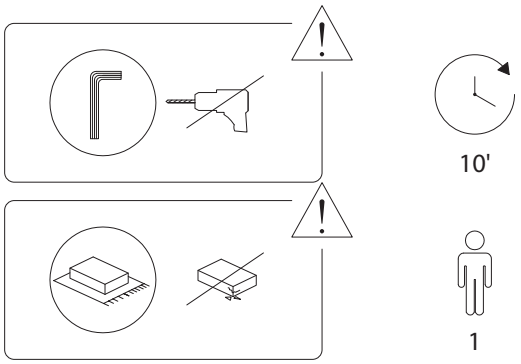
10'
1

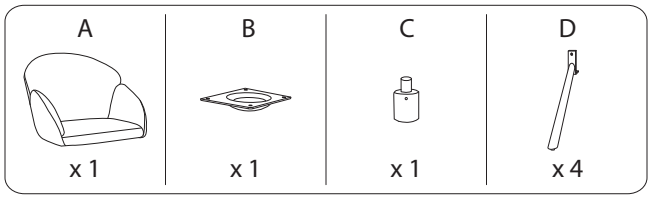
A
x 1
B
x 1
C
x 1
D
x 4

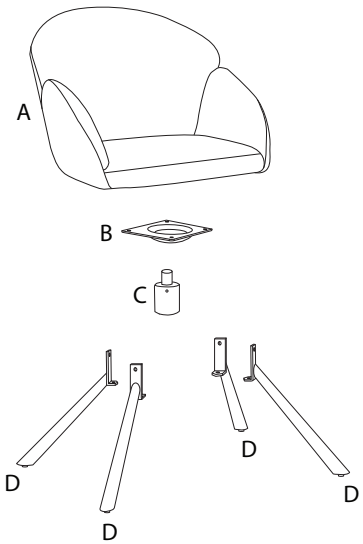
A
B
C
D
D
D
D

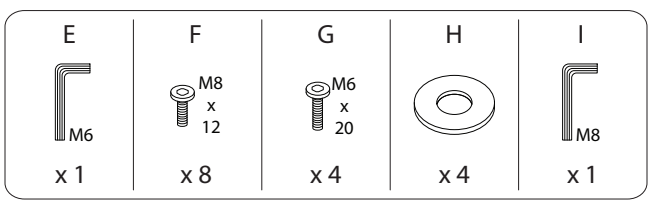
E
M6
x 1
F
M8 x 12
x 8
G
M6 x 20
x 4
H
x 4
I
M8
x 1

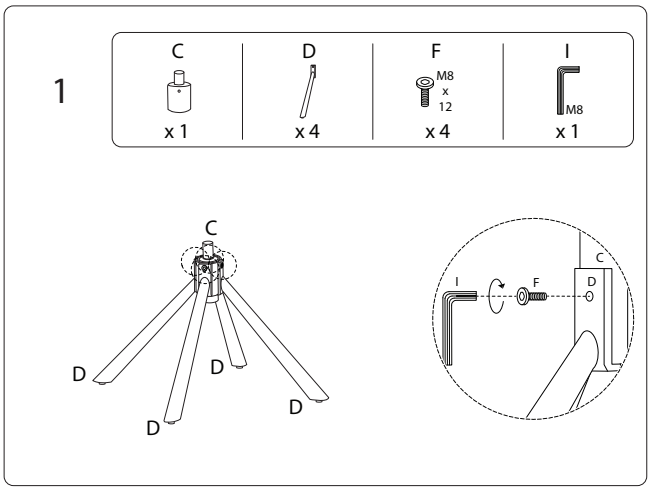
1
C
x 1
D
x 4
F
M8 x 12
x 4
I
M8
x 1
C
D
D
D
D
C
I
F
D

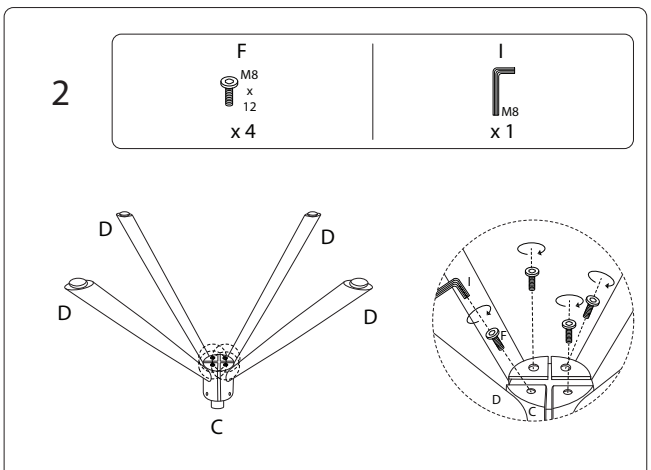
2
F
M8 x 12
x 4
I
M8
x 1
D
D
D
D
C
I
F
D
C

3

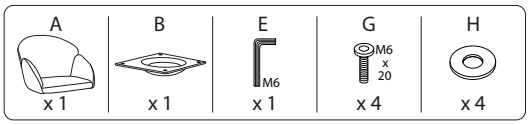

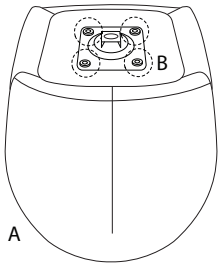

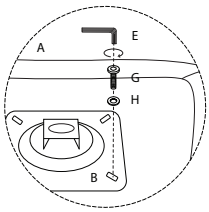

4

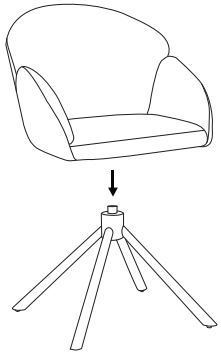

2376/MAYBEE/030426/