DJYC 2306

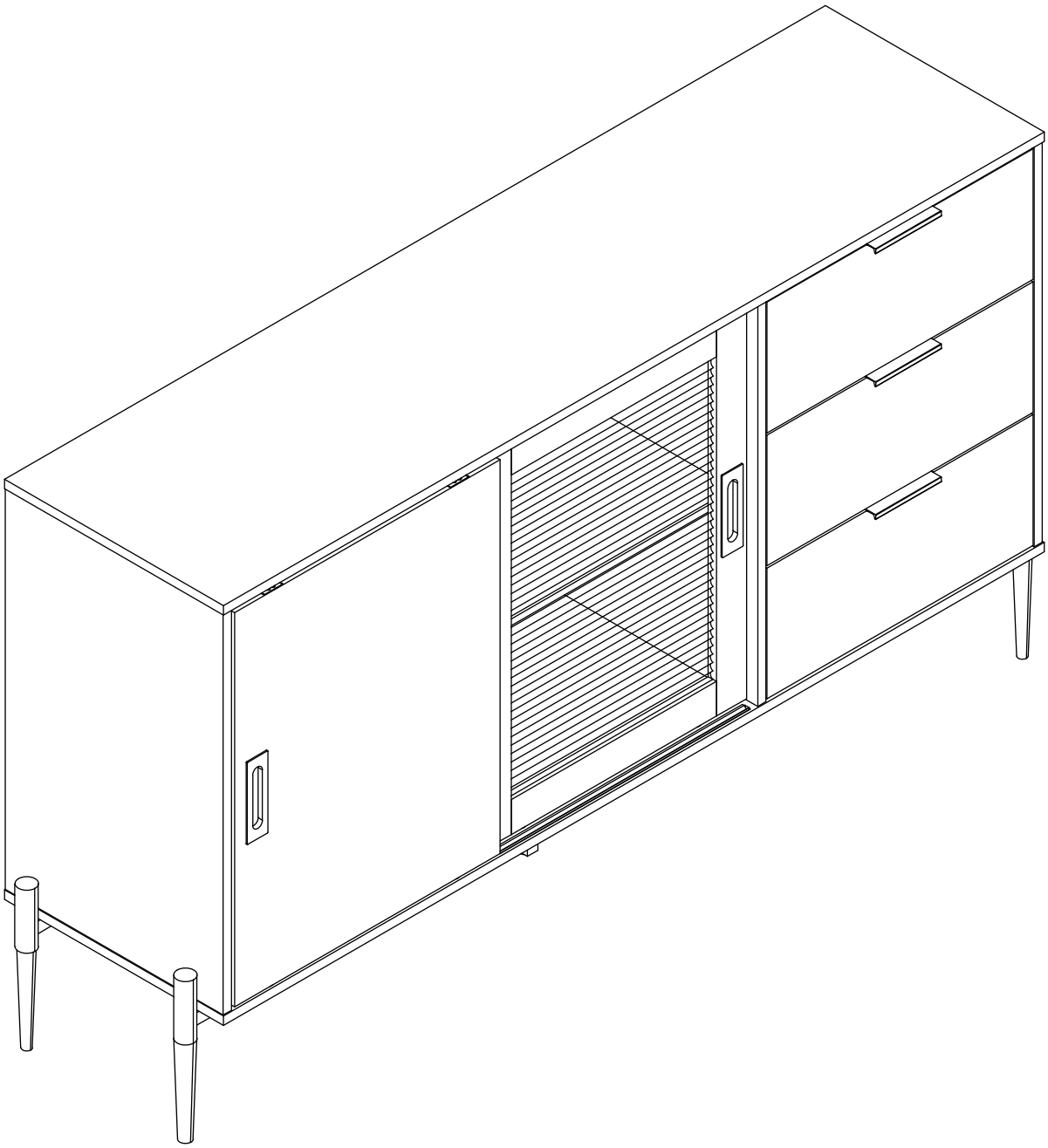

Exploded View

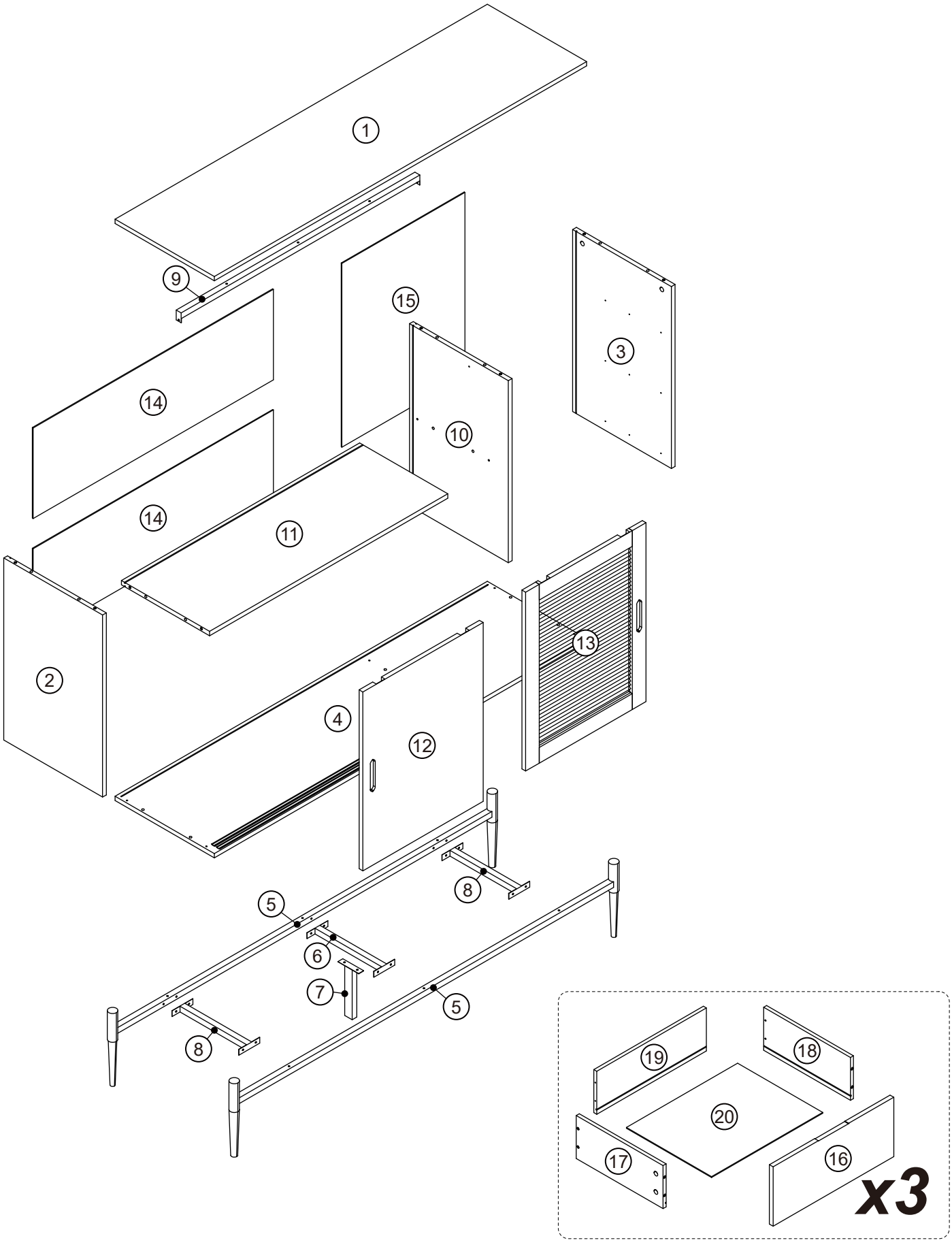

Fittings

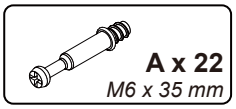
A x 22
M6 x 35 mm

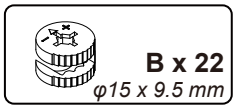
B x 22
φ15 x 9.5 mm

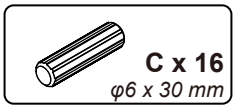
C x 16
φ6 x 30 mm


D x 12
φ4 x 35 mm

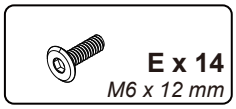
E x 14
M6 x 12 mm

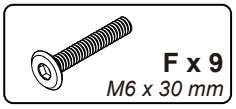
F x 9
M6 x 30 mm

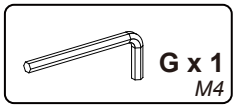
G x 1
M4

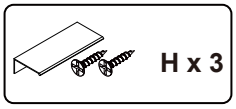
H x 3

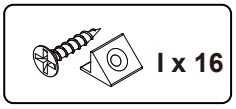
I x 16

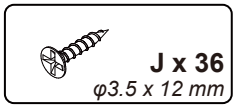
J x 36
φ3.5 x 12 mm


K x 2


L x 2


M x 2

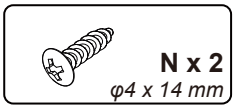
N x 2
φ4 x 14 mm

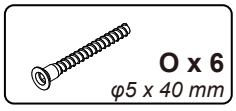
O x 6
φ5 x 40 mm

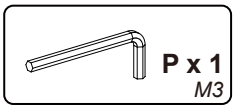
P x 1
M3

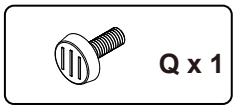
Q x 1


R x 4

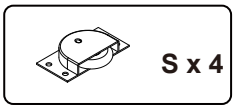
S x 4

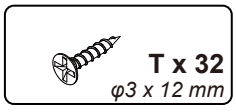
T x 32
φ3 x 12 mm


CL x 3
300 mm

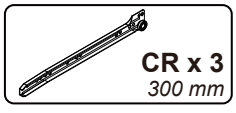
CR x 3
300 mm


DL x 3
300 mm


DR x 3
300 mm

1

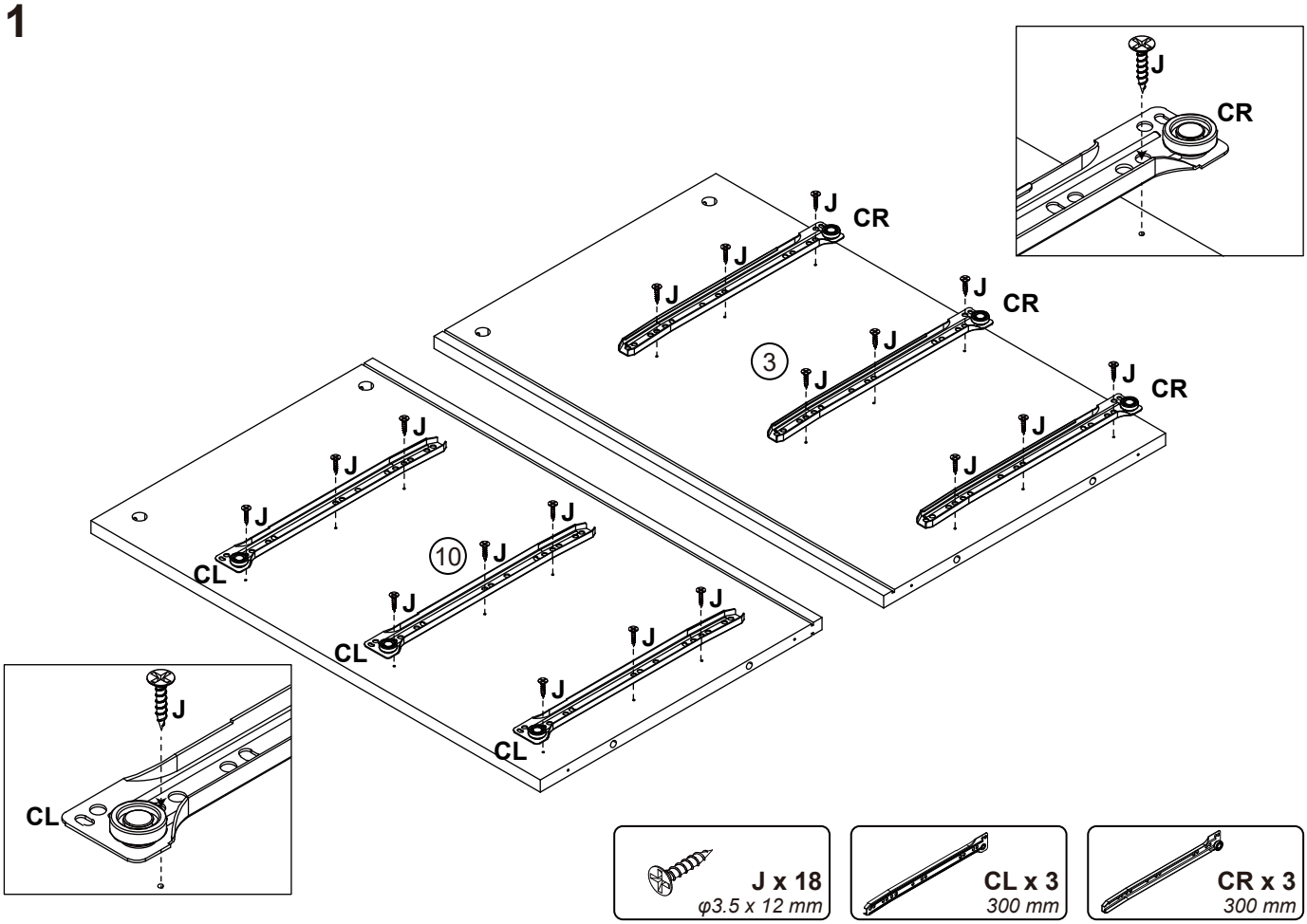
J
CR
J
CR
J
J
J
CR
3
J
J
J
CR
J
J
J
J
CL
10
J
J
J
CL
J
J
J
CL
J
CL
J x 18
φ3.5 x 12 mm
CL x 3
300 mm
CR x 3
300 mm

2

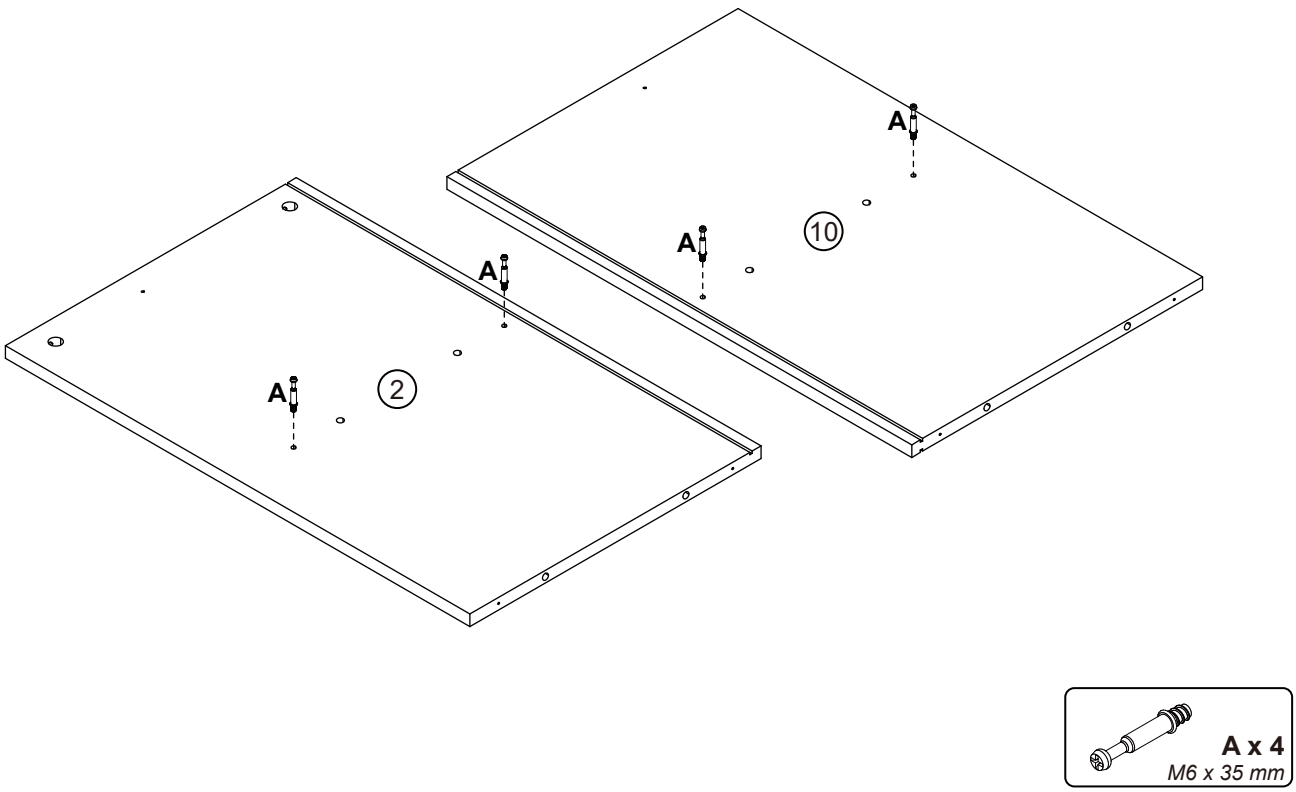
A
A
10
A
A
2
A x 4
M6 x 35 mm

3

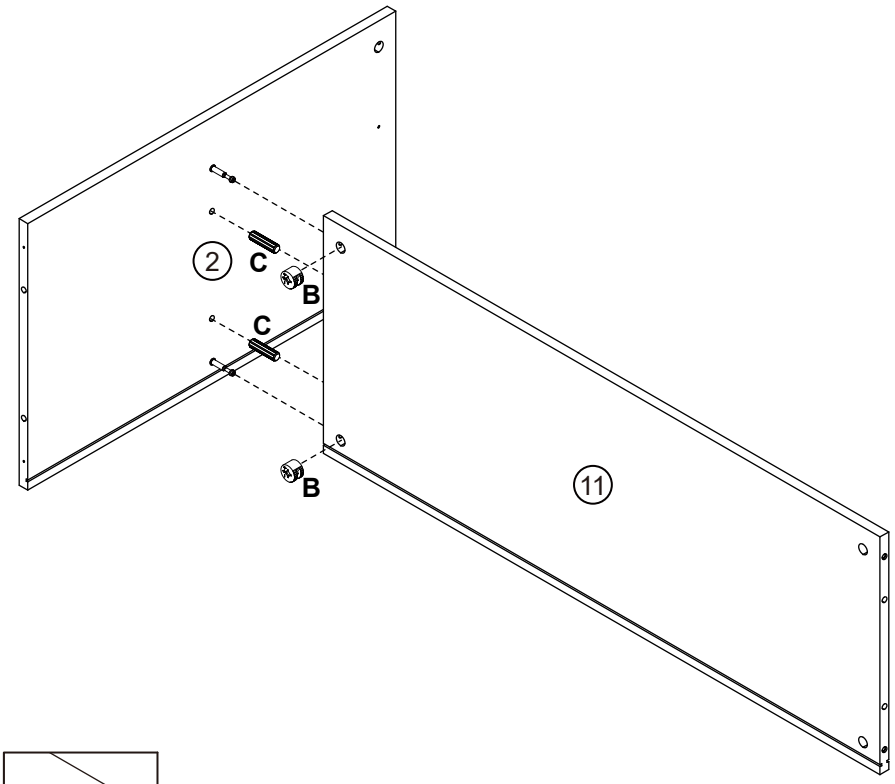

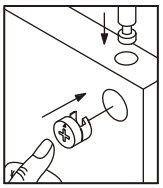

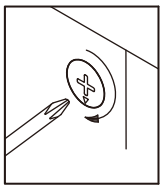



B x 2
φ15 x 9.5 mm

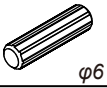

C x 2
φ6 x 30 mm

4

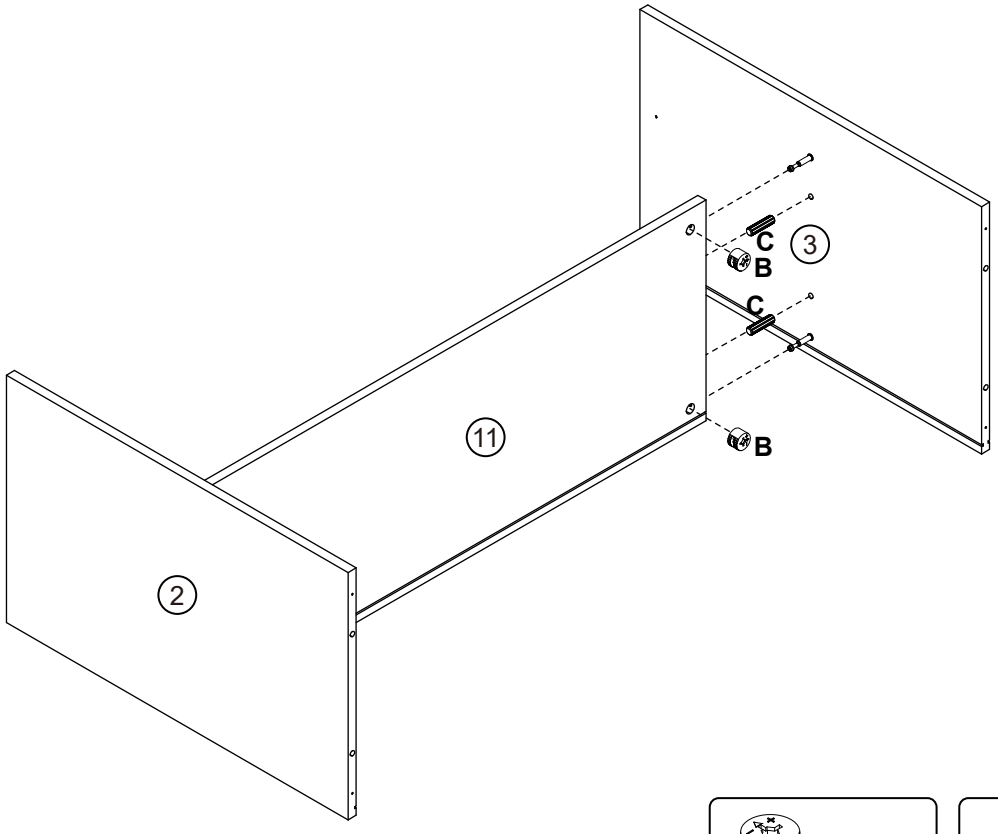



B x 2
φ15 x 9.5 mm

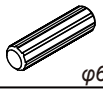

C x 2
φ6 x 30 mm

5

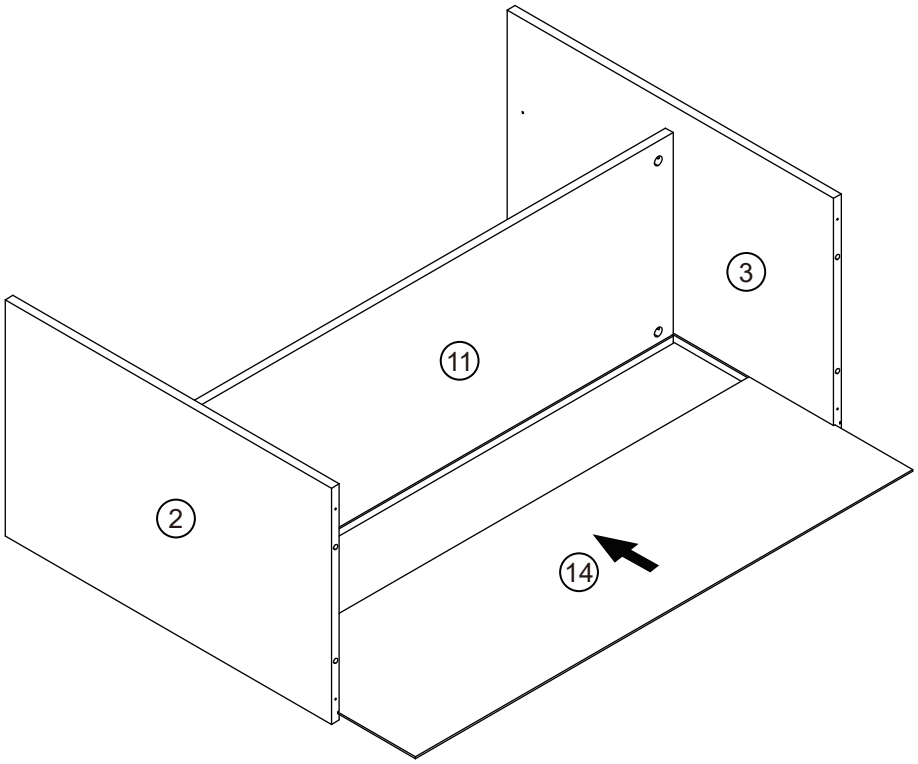

6

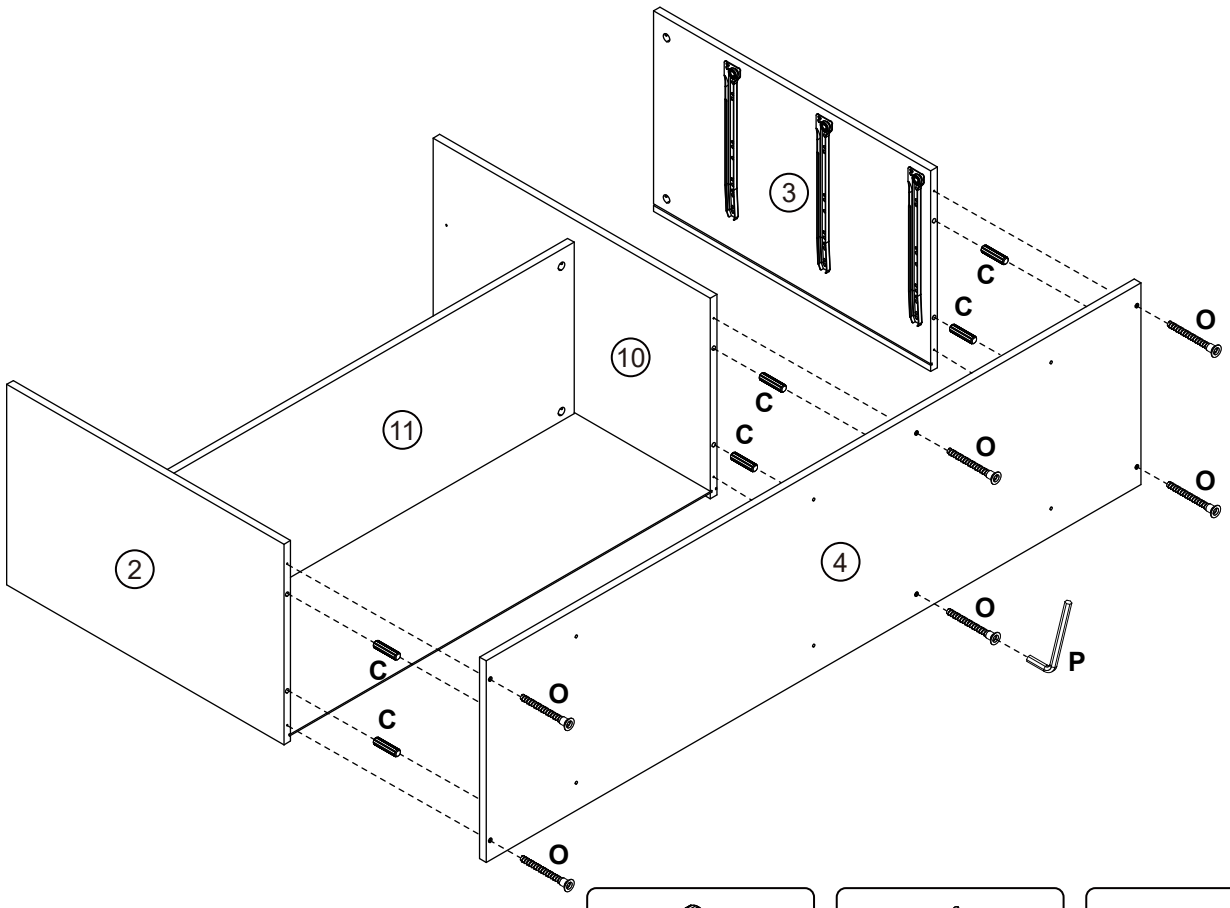

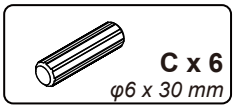
C x 6
φ6 x 30 mm

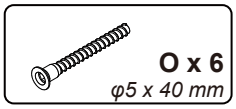
O x 6
φ5 x 40 mm

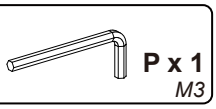
P x 1
M3

7

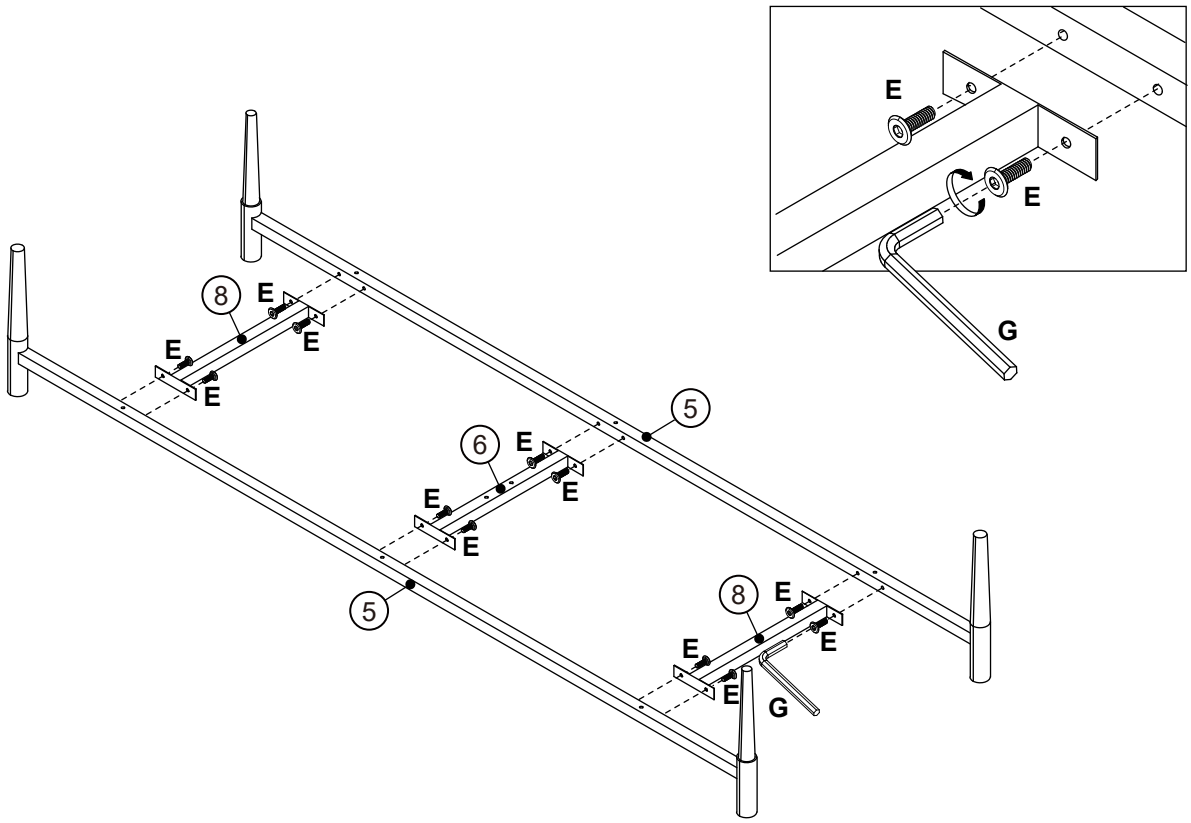


E x 12
M6 x 12 mm


G x 1
M4

8

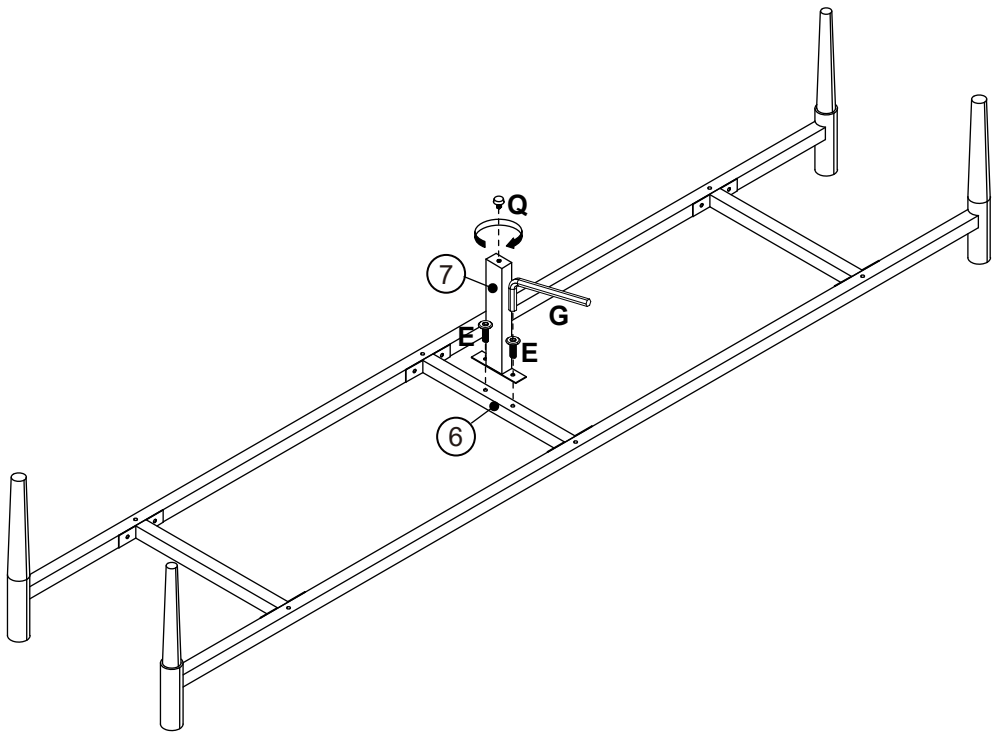


E x 2
M6 x 12 mm

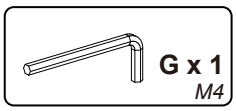
G x 1
M4

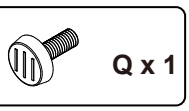
Q x 1

9

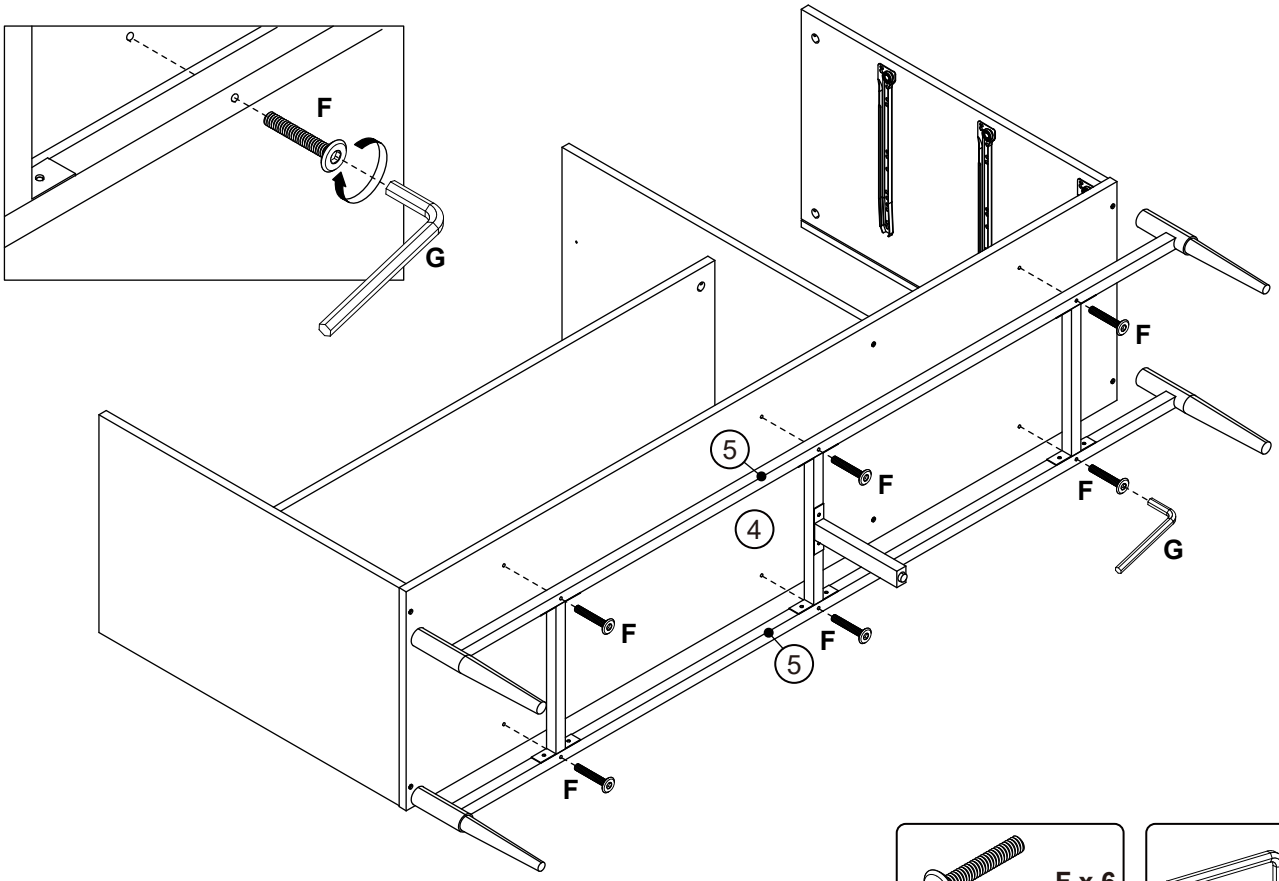

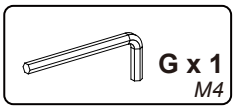

10

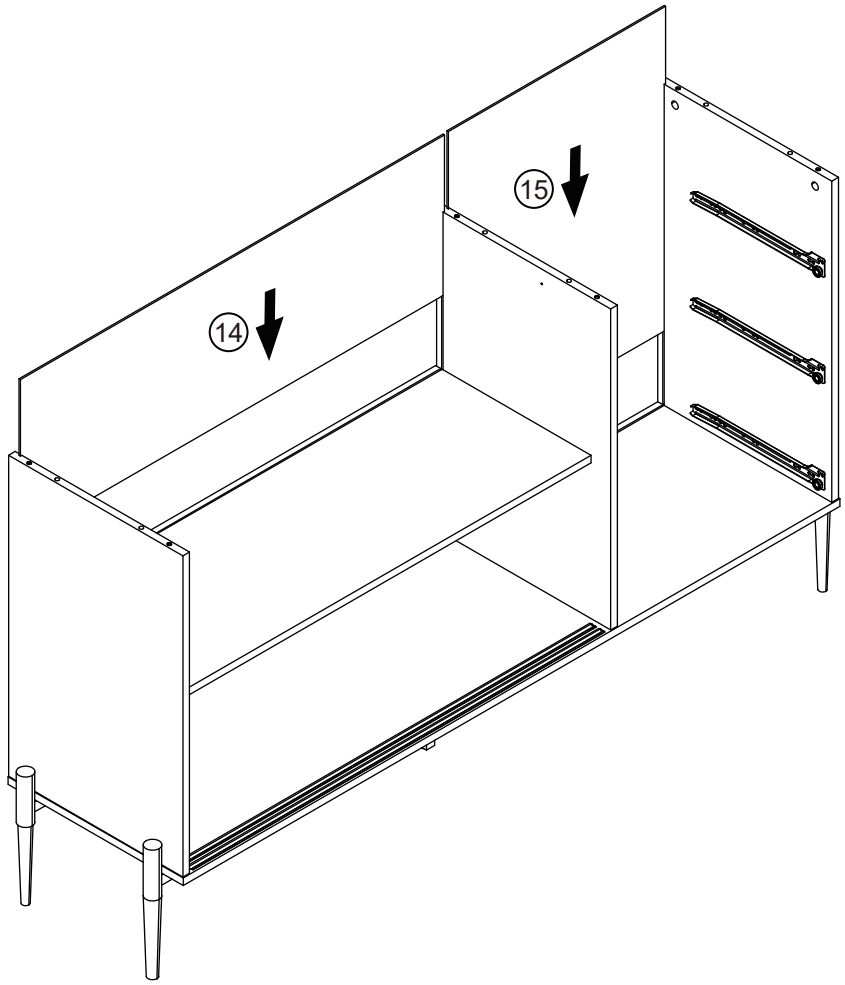

11

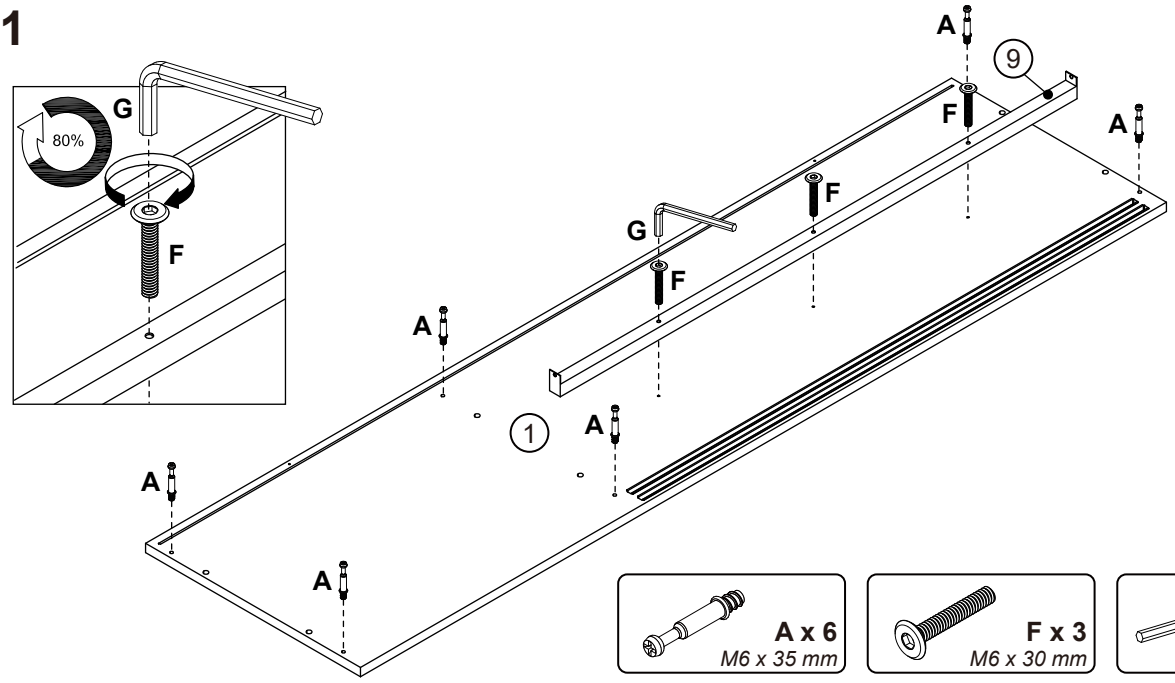

A x 6
M6 x 35 mm

F x 3
M6 x 30 mm

G x 1
M4

12

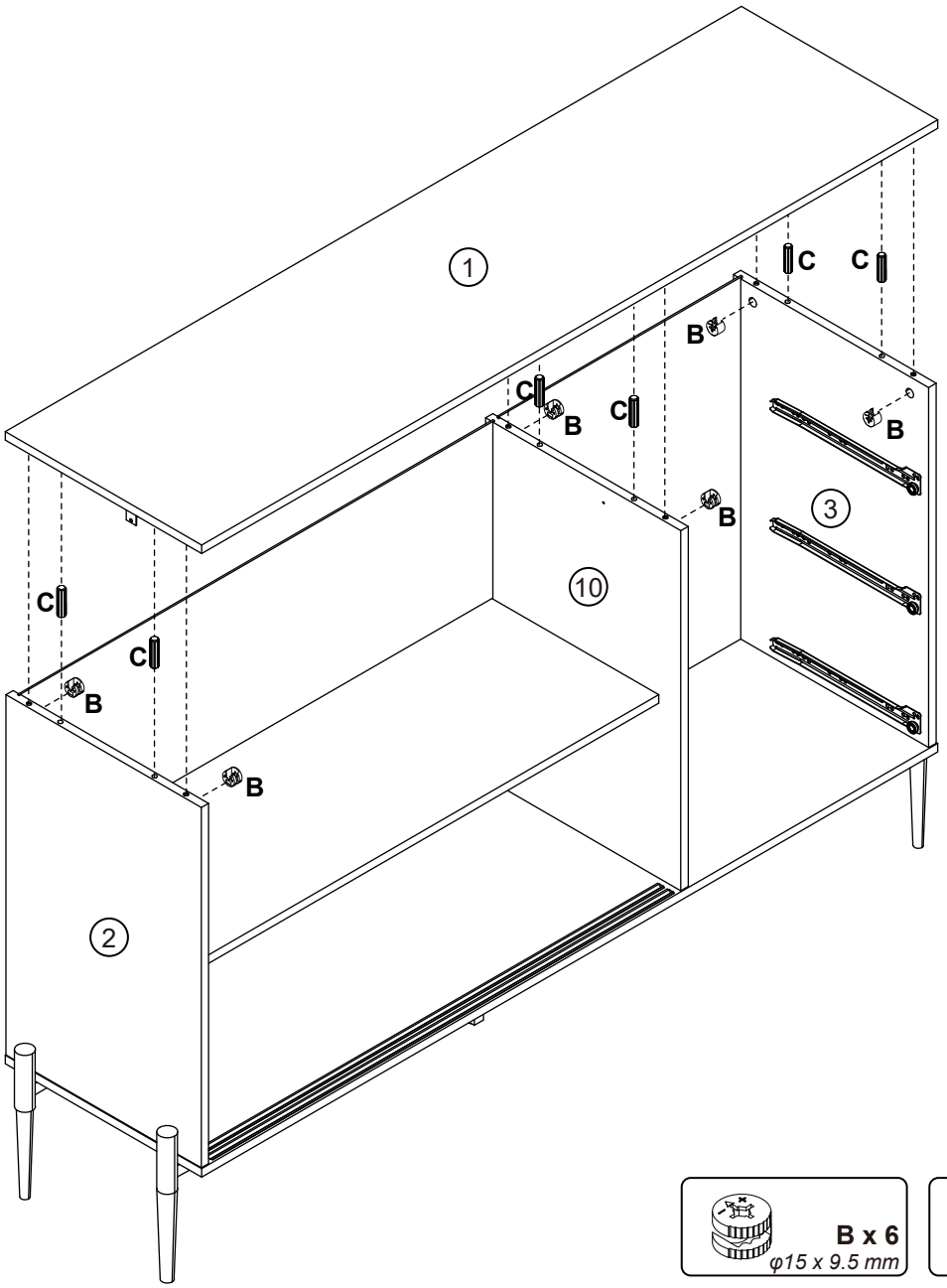

B x 6
φ15 x 9.5 mm

C x 6
φ6 x 30 mm

13

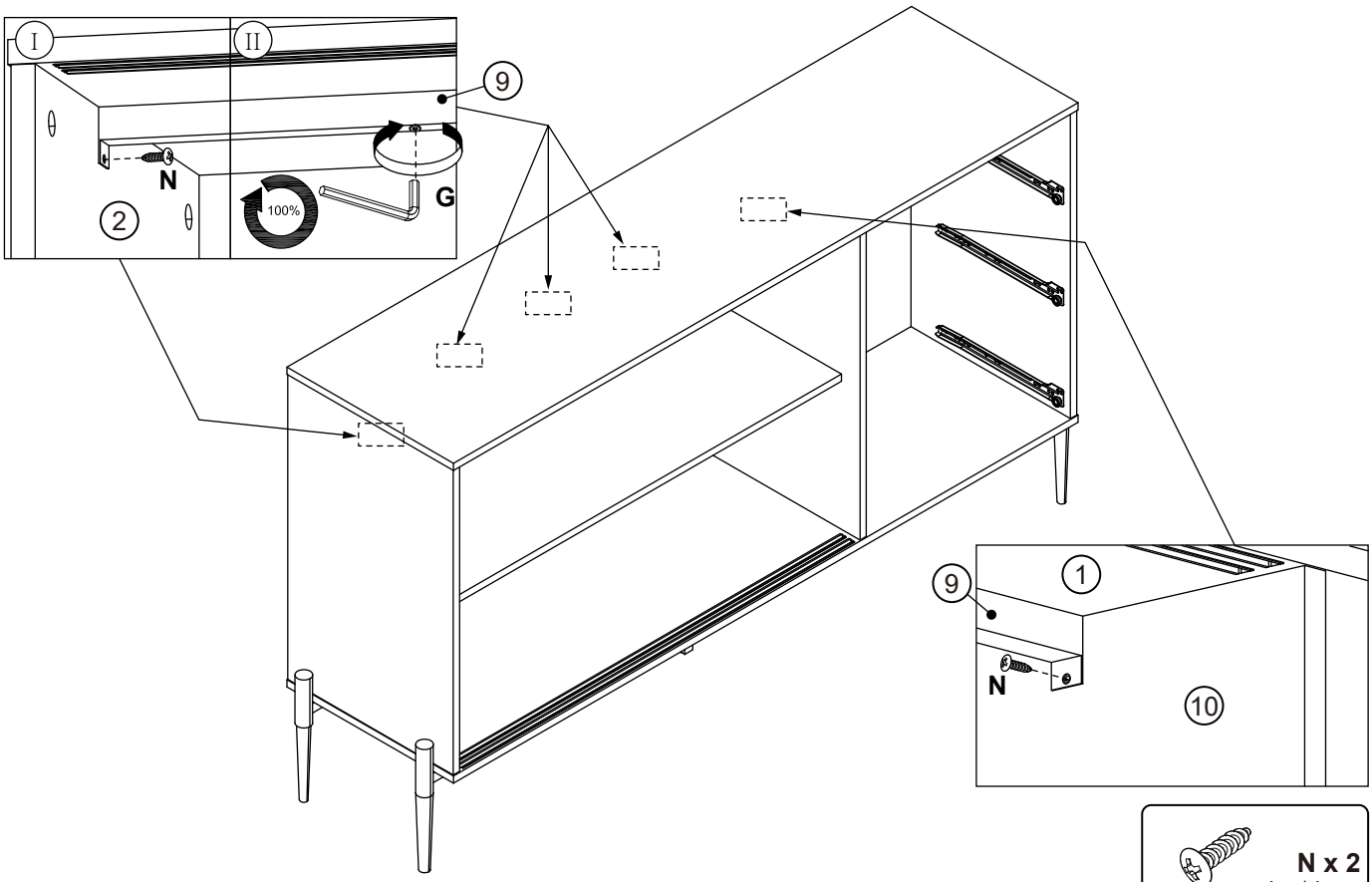

N x 2
φ4 x 14 mm

14

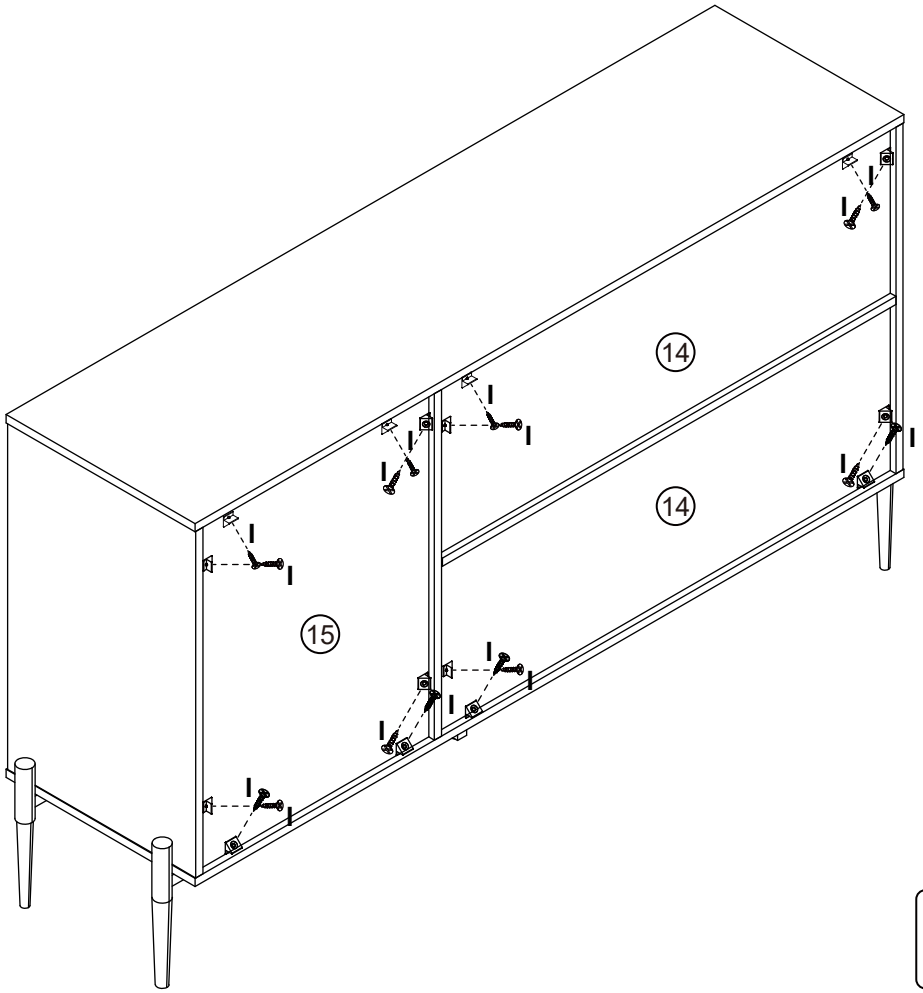

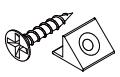

I x 16

15

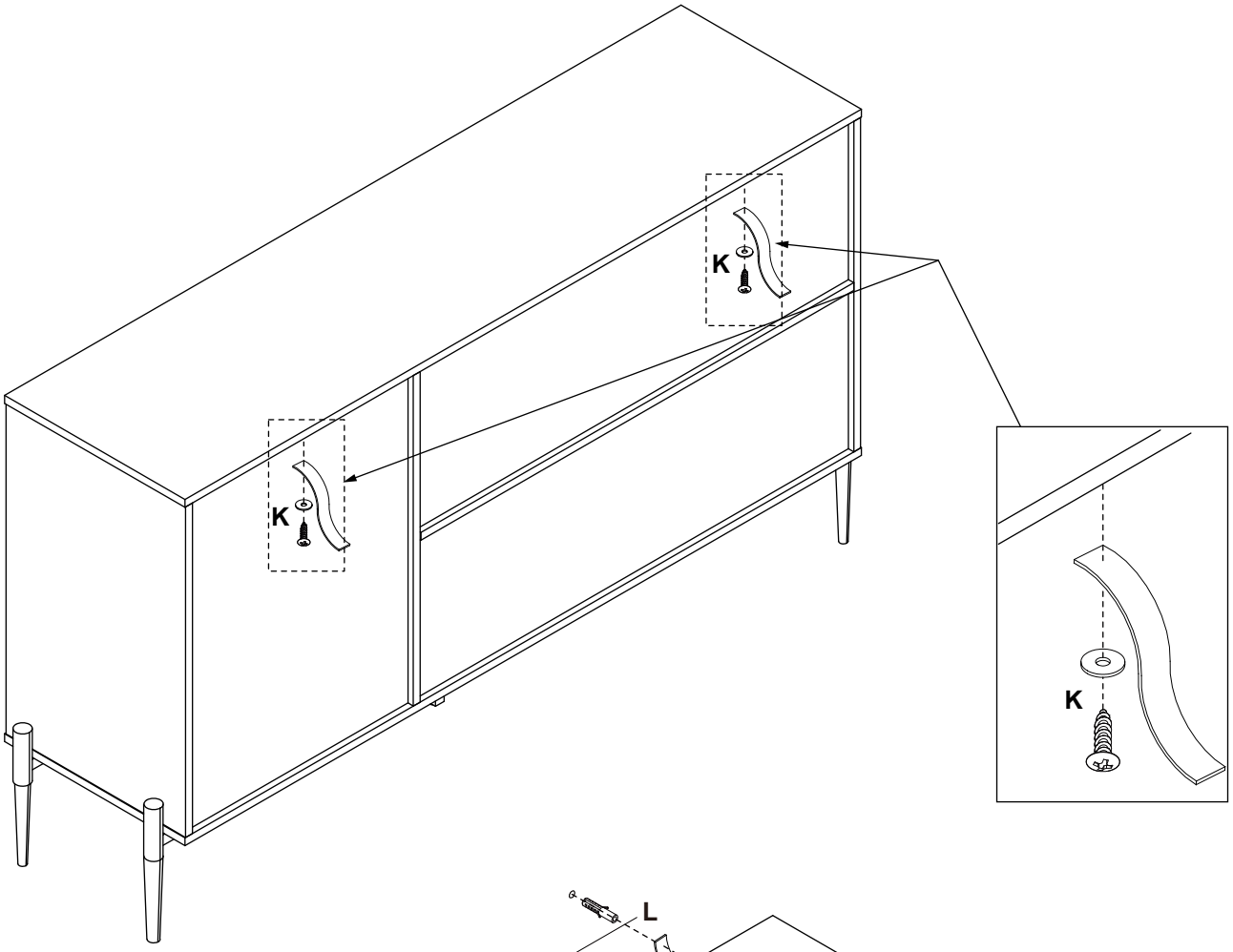

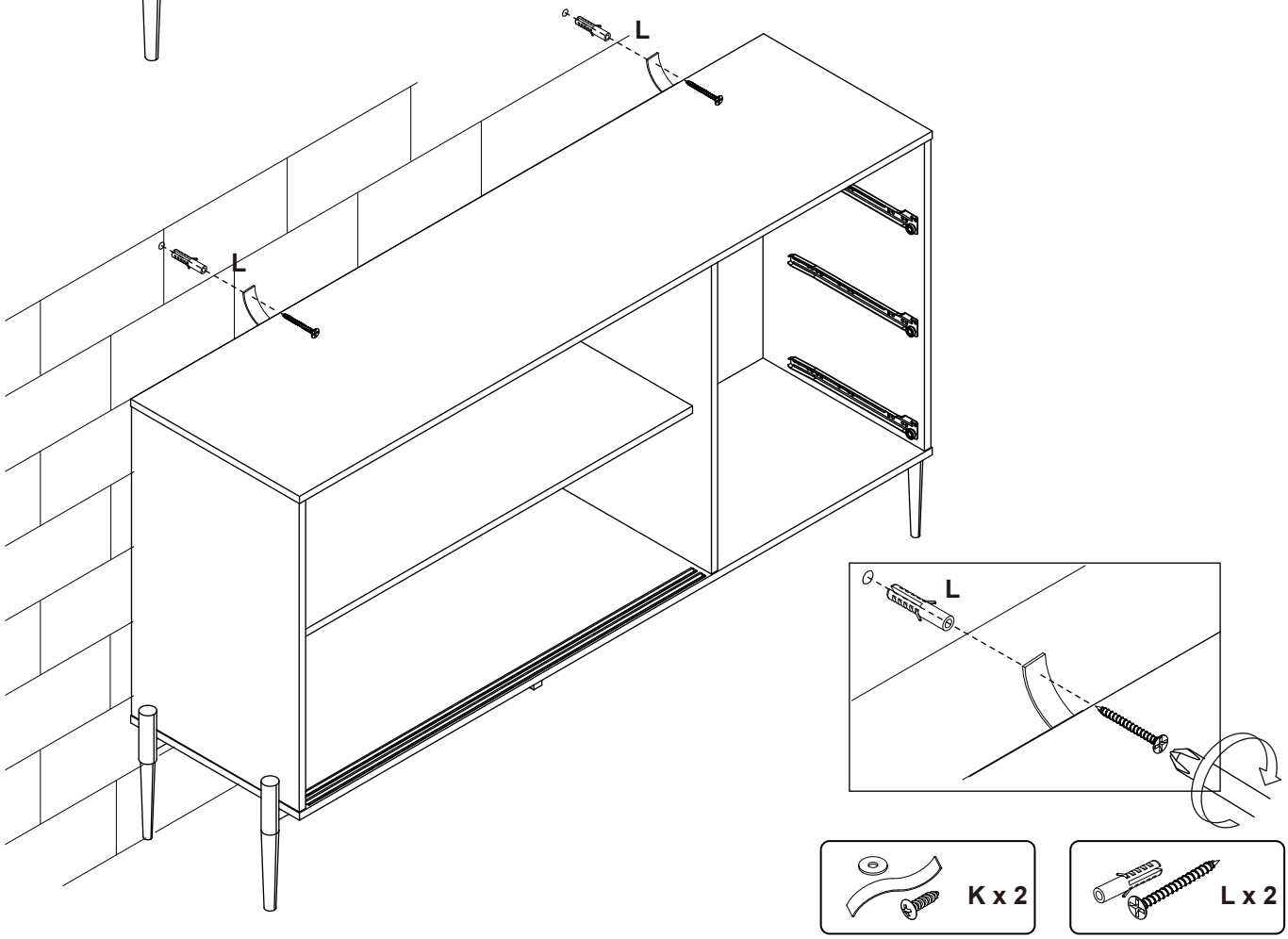



16

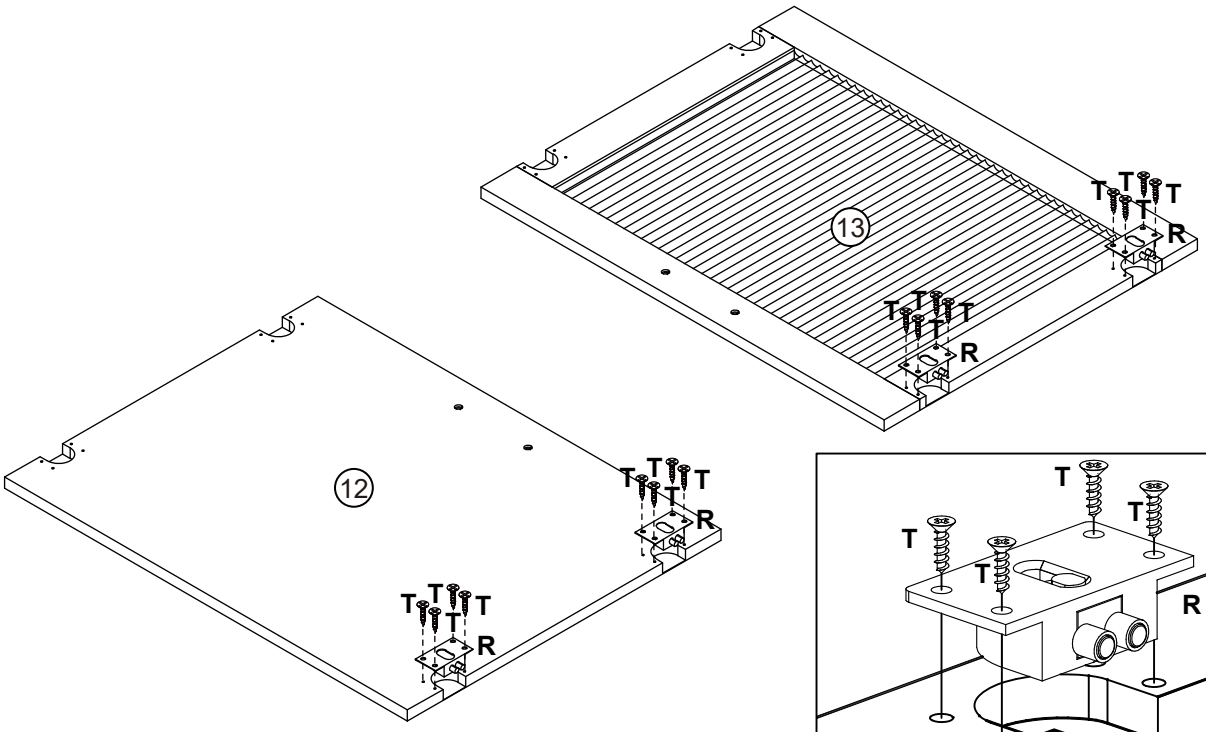

R x 4

T x 16
φ3 x 12 mm

17

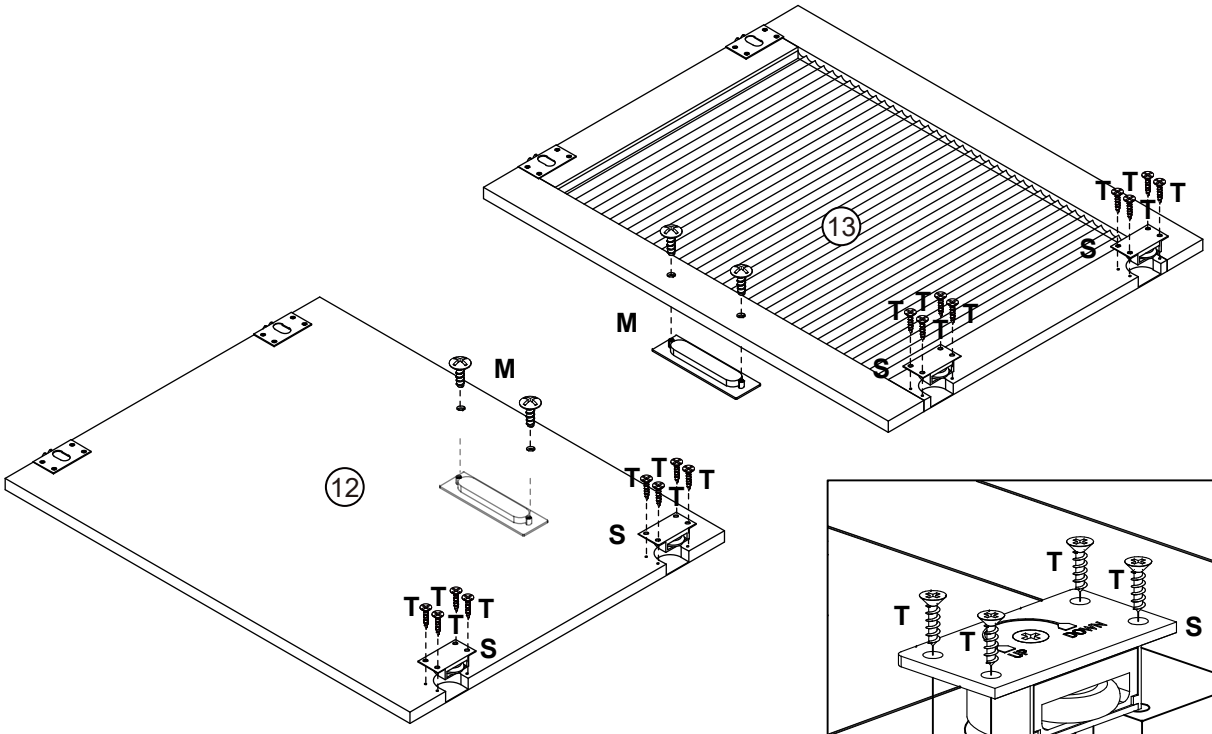

M x 2

S x 4

T x 16
φ3 x 12 mm

18

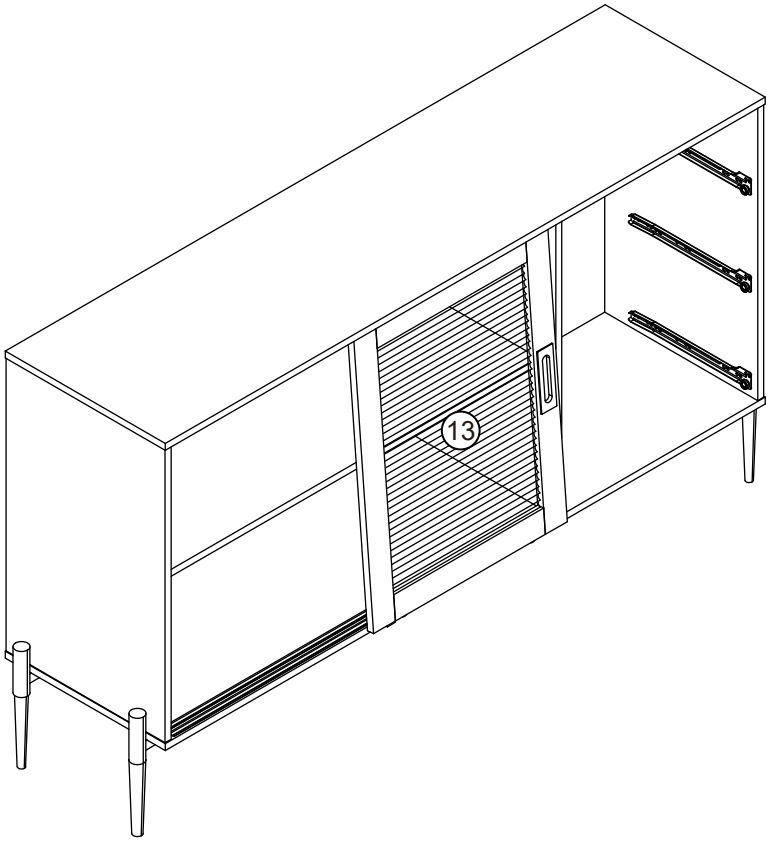

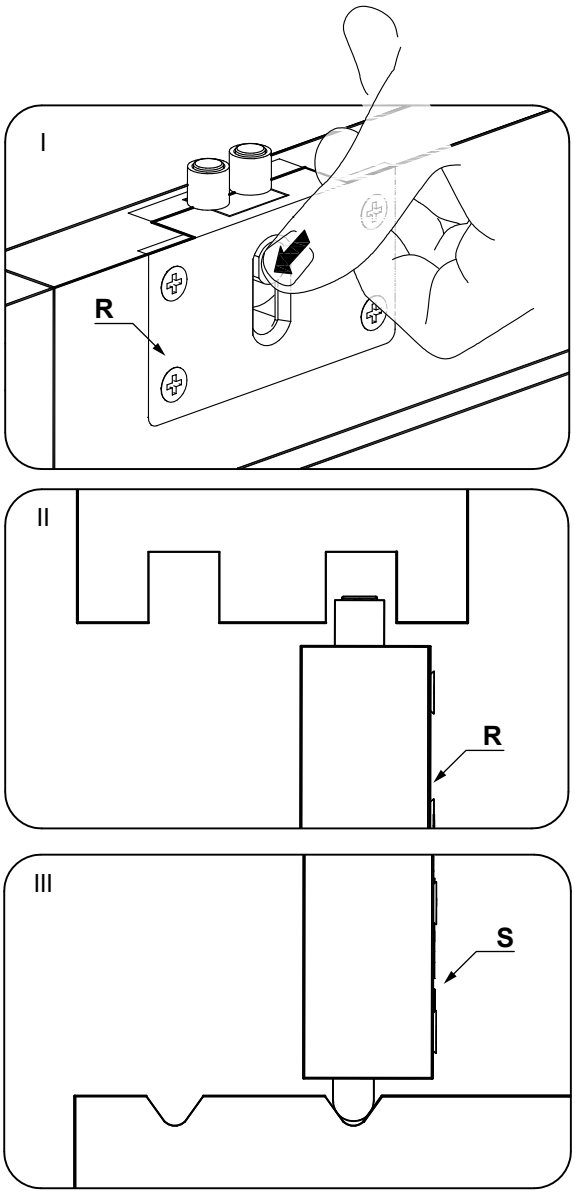

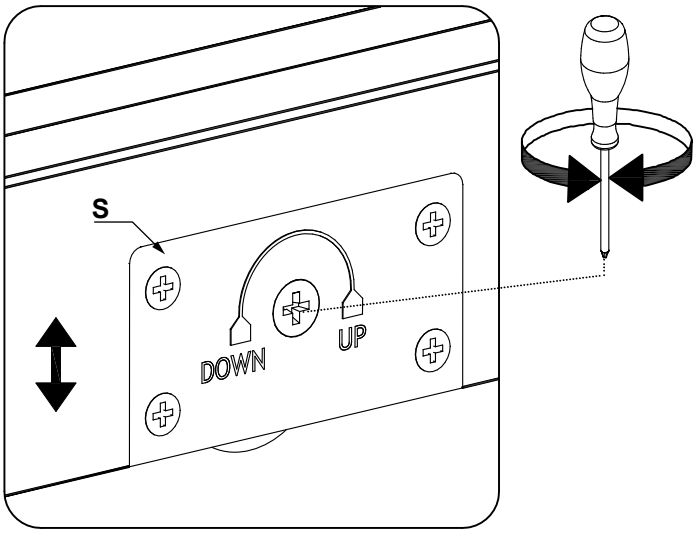

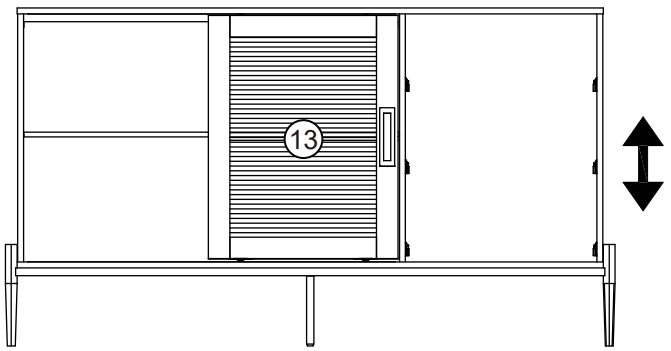

19

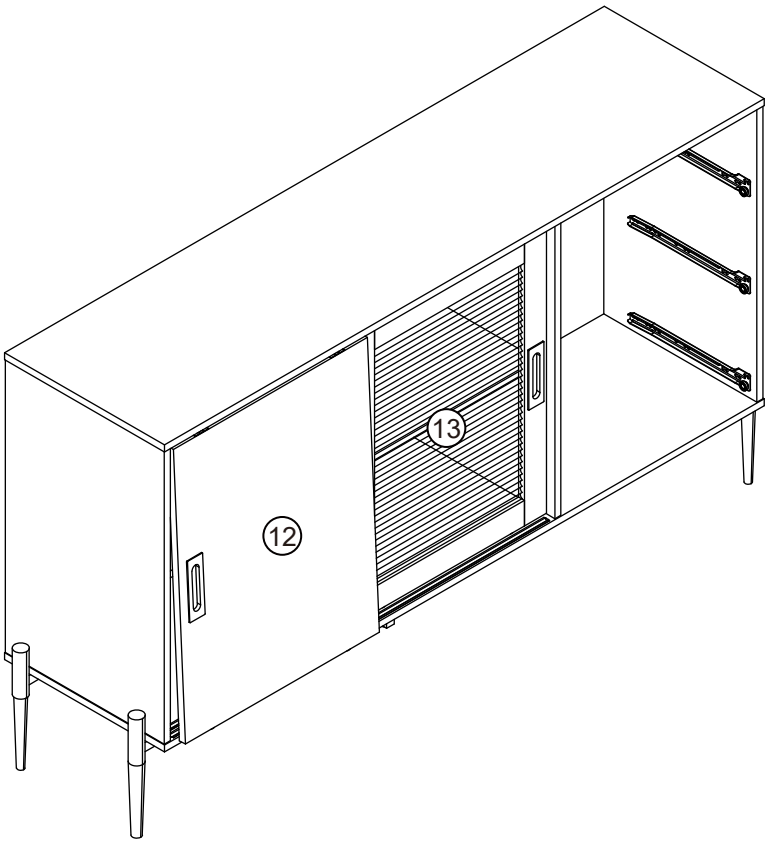

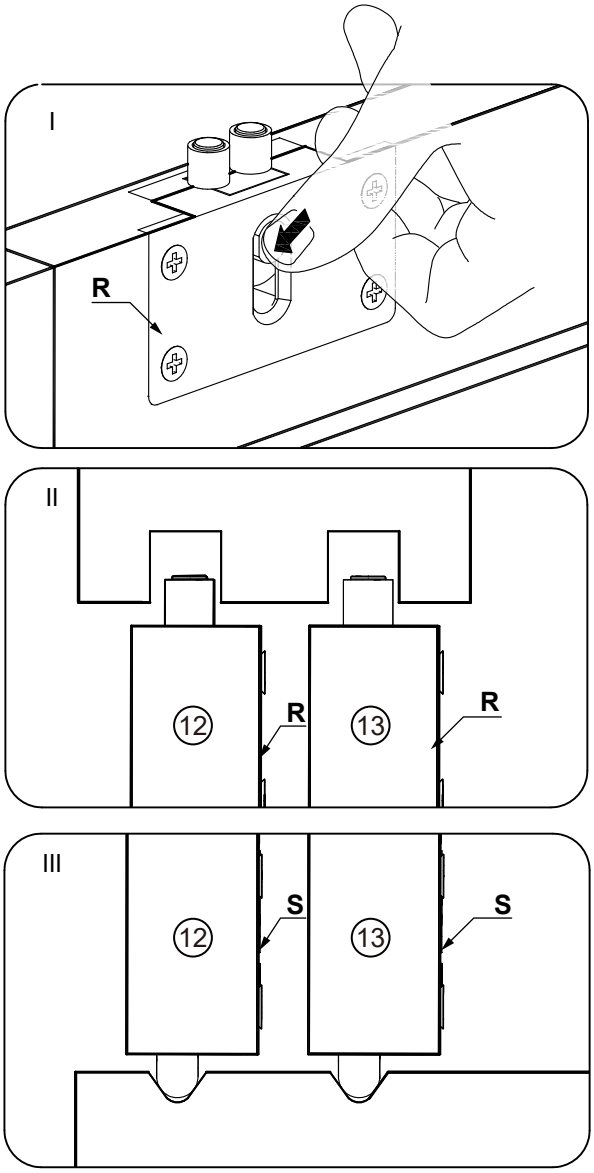

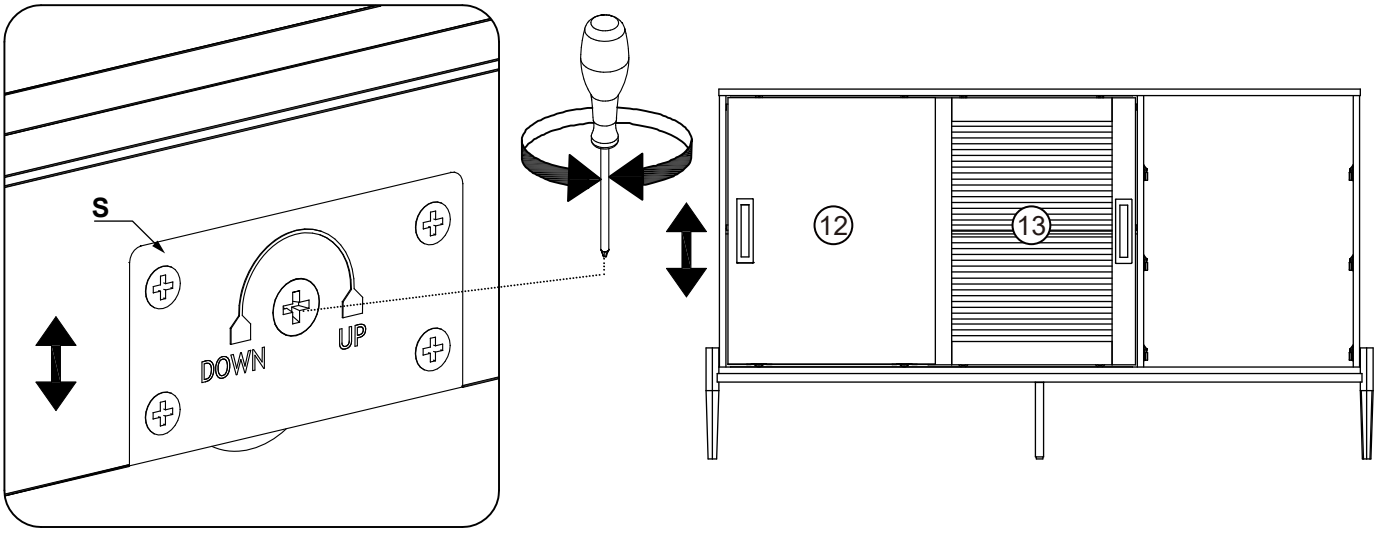

20

x3

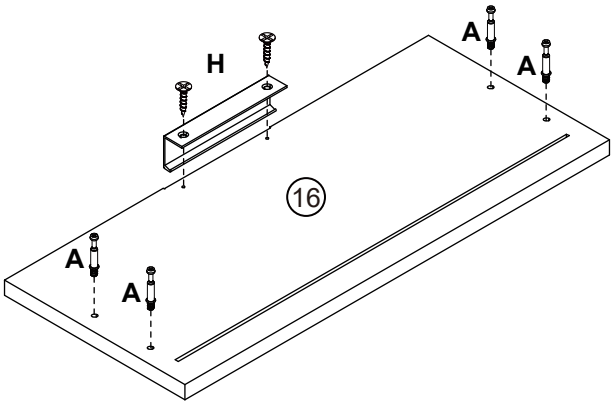

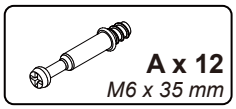

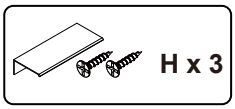

21

x3

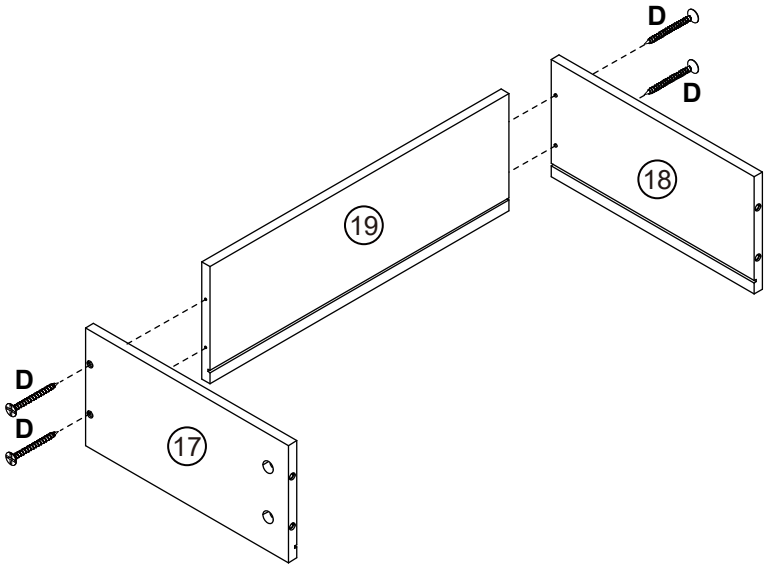

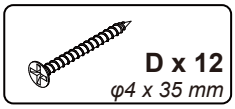

22

x3

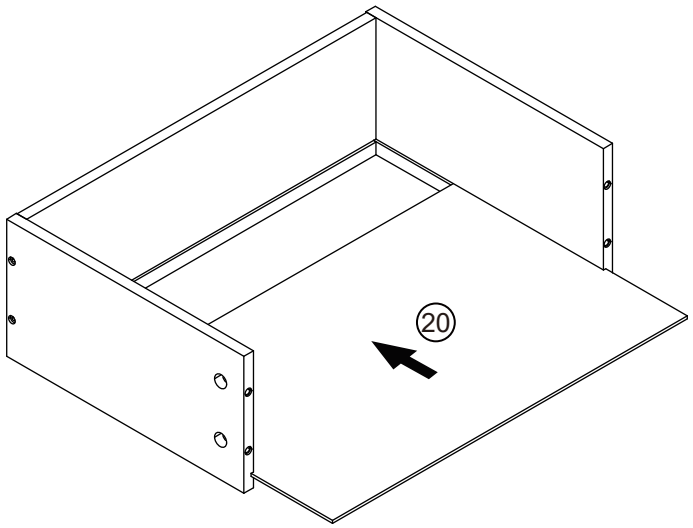

23

x3

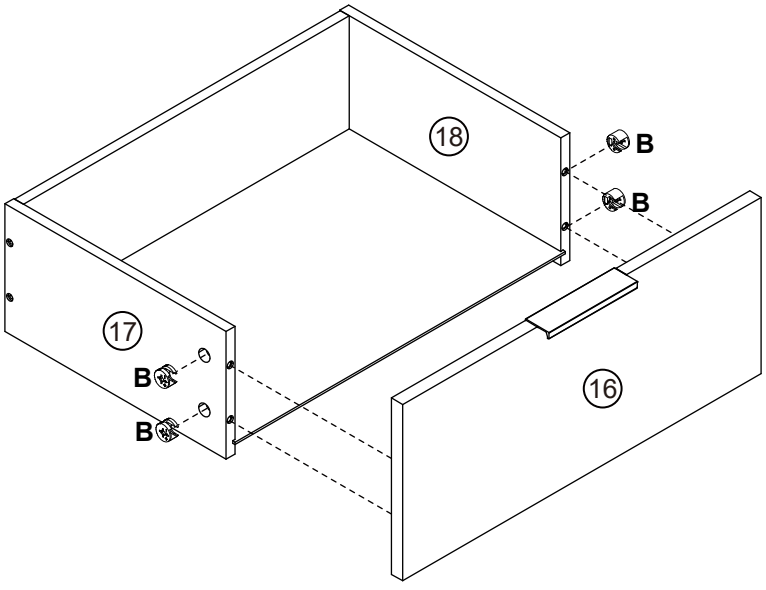

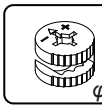

B x 12
φ15 x 9.5 mm

24

x3

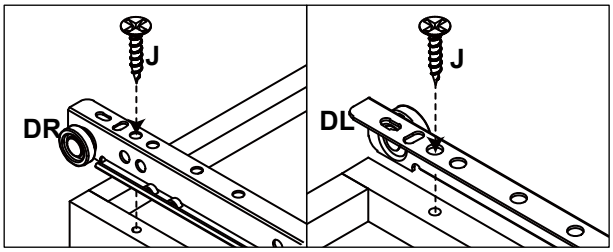

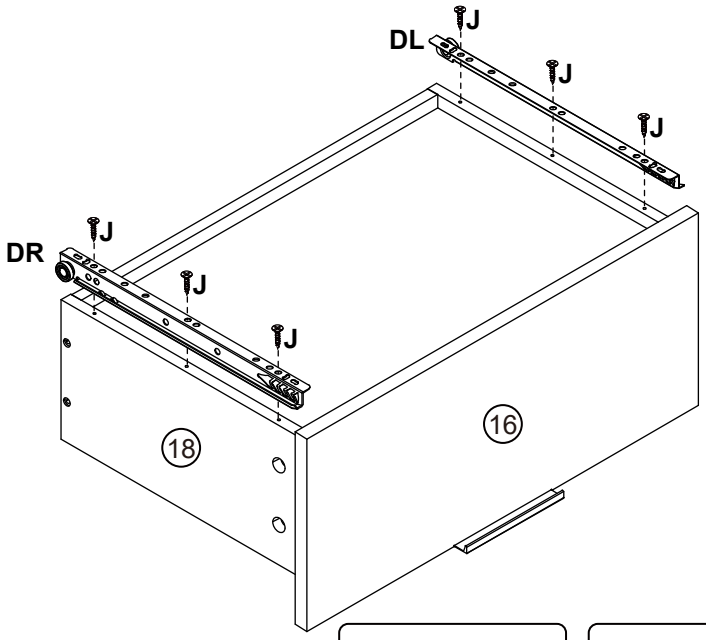

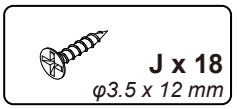
J x 18
φ3.5 x 12 mm


DL x 3
300 mm

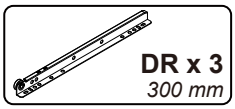
DR x 3
300 mm

25

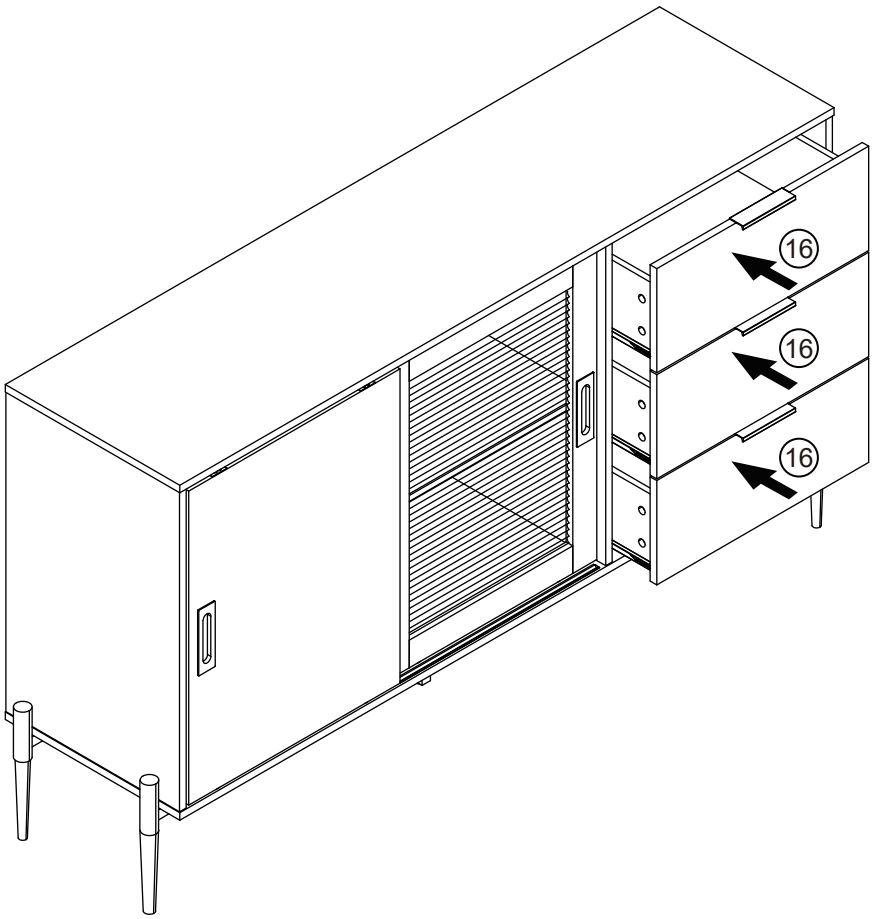

26

