LEDUC

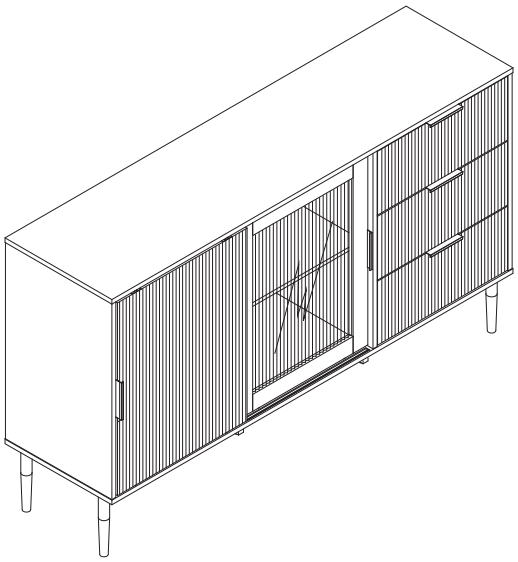

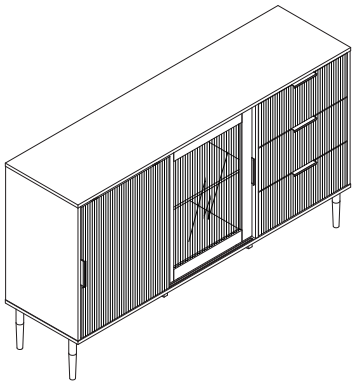

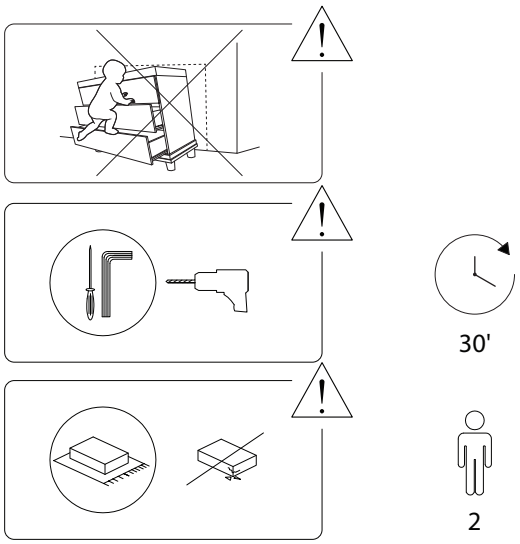

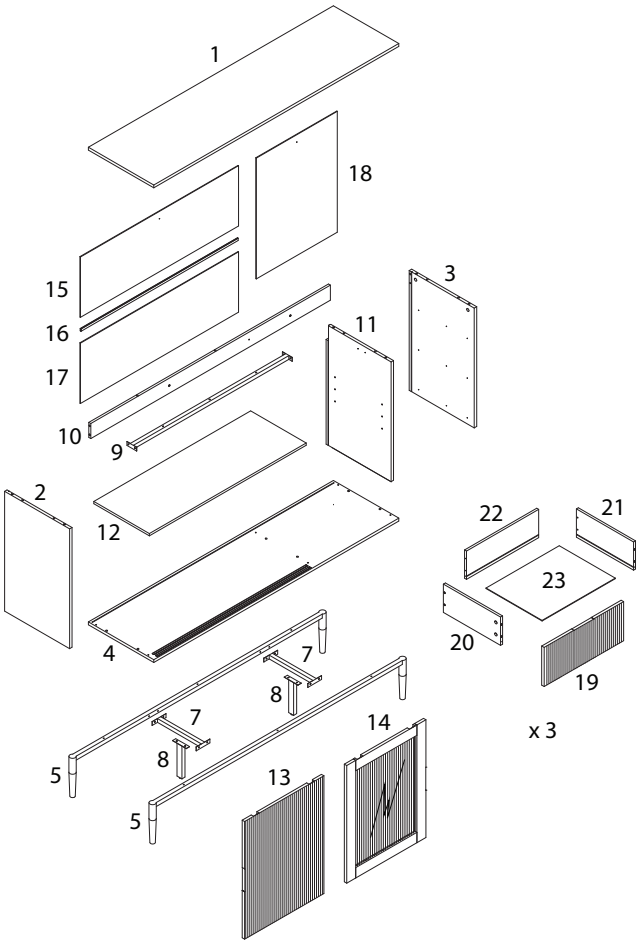

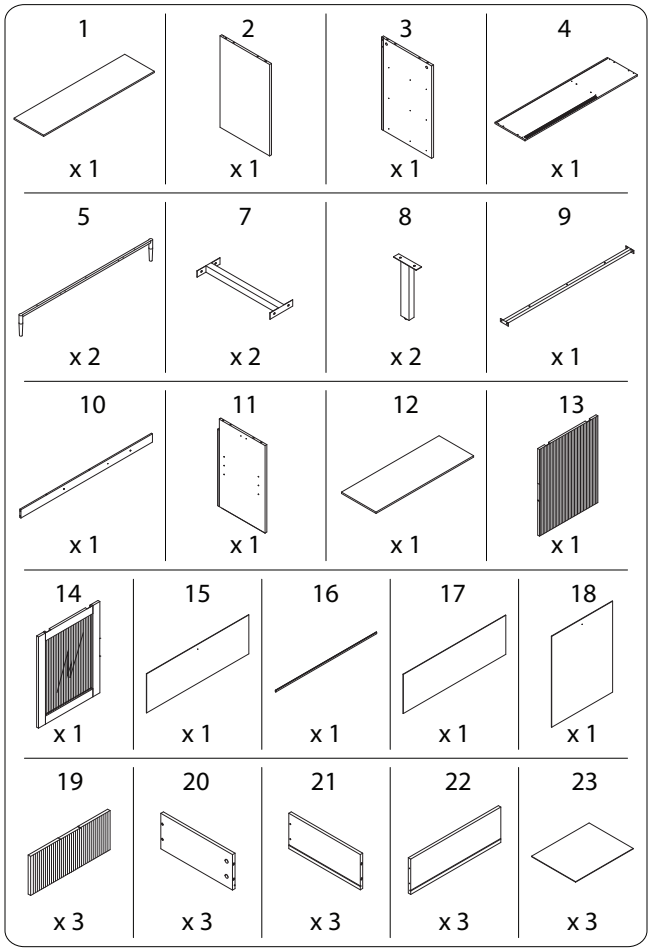

2619/LEDUC/200126/

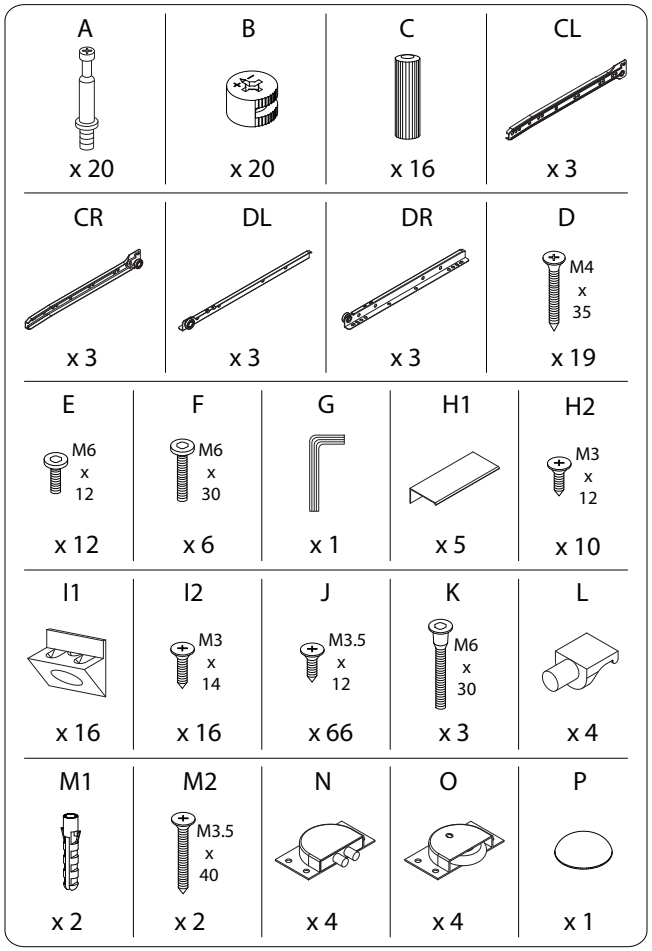
A
x 20
B
x 20
C
x 16
CL
x 3
CR
x 3
DL
x 3
DR
x 3
D
M4 x 35
x 19
E
M6 x 12
x 12
F
M6 x 30
x 6
G
x 1
H1
x 5
H2
M3 x 12
x 10
I1
x 16
I2
M3 x 14
x 16
J
M3.5 x 12
x 66
K
M6 x 30
x 3
L
x 4
M1
x 2
M2
M3.5 x 40
x 2
N
x 4
O
x 4
P
x 1

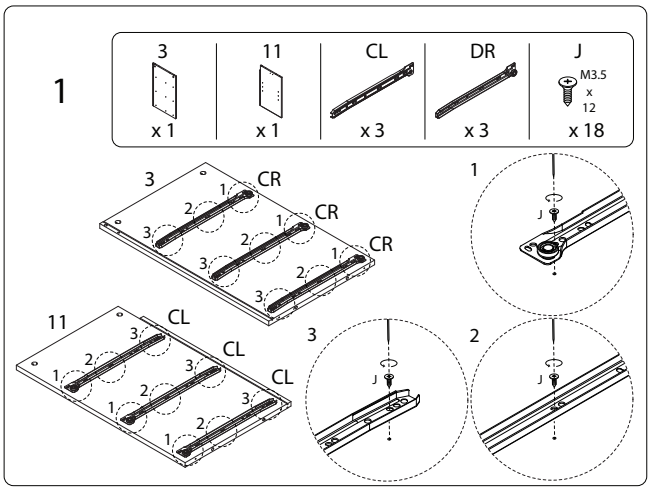
1
3
x 1
11
x 1
CL
x 3
DR
x 3
J
M3.5 x 12
x 18
3
CR
CR
CR
11
CL
CL
CL
1
J
3
J
2
J

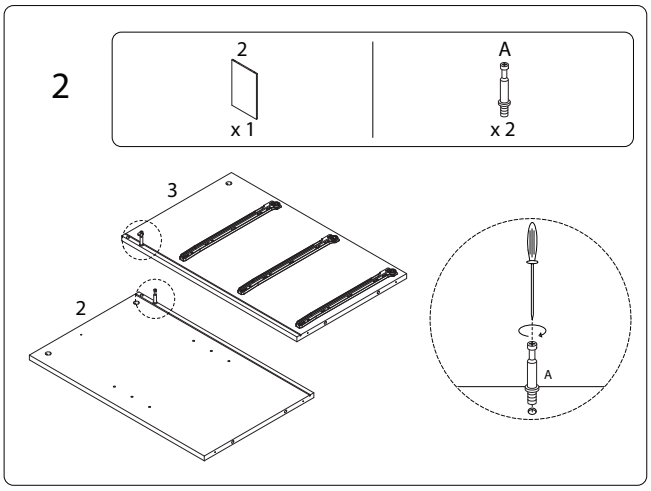
2
2
x 1
A
x 2
3
2
A

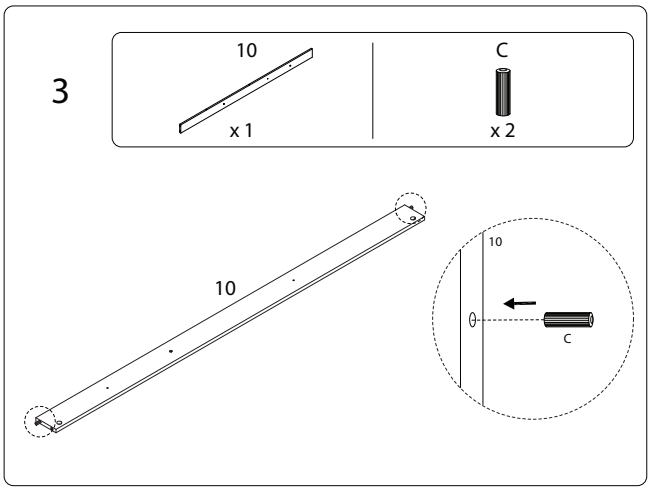
3
10
x 1
C
x 2
10
10
C

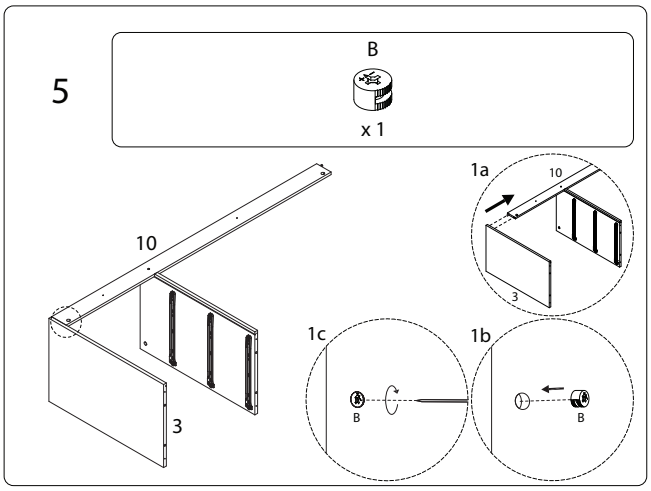
5
B
x 1
10
3
1a
10
3
1c
B
1b
B

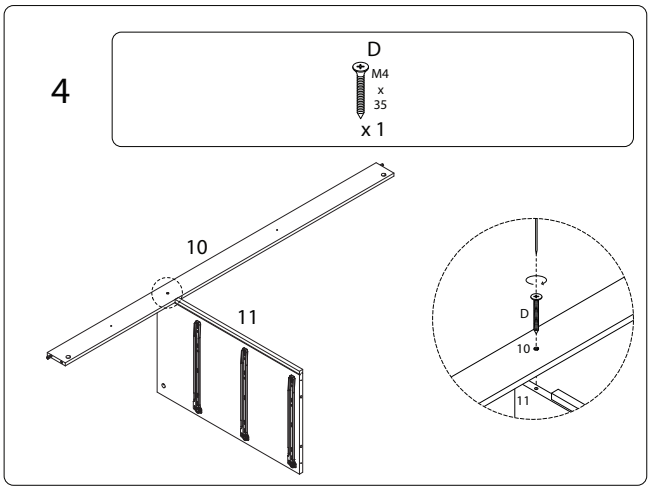
4
D
M4 x 35
x 1
10
11
D
10
11

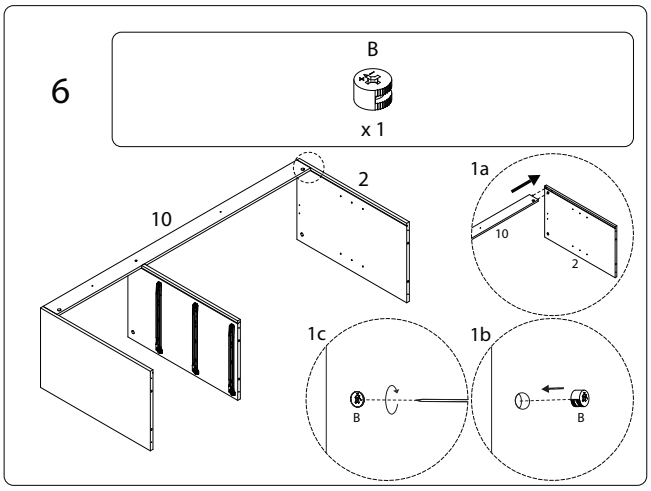
6
B
x 1
10
2
1a
10
2
1c
B
1b
B

7

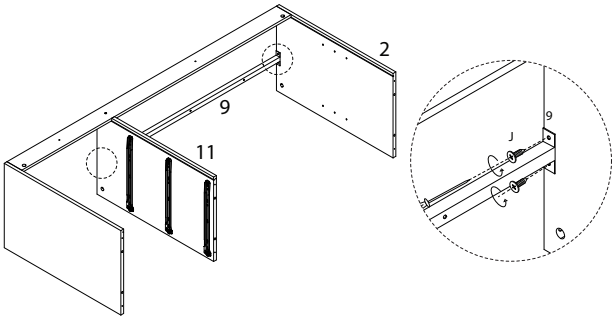

8

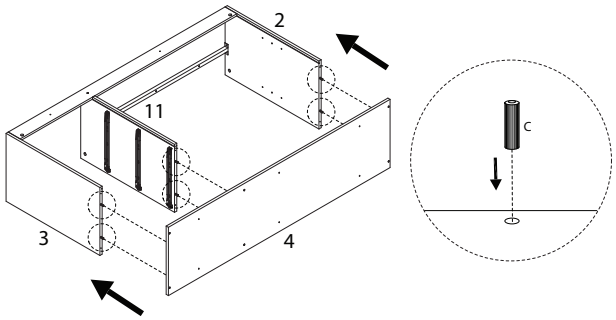

9

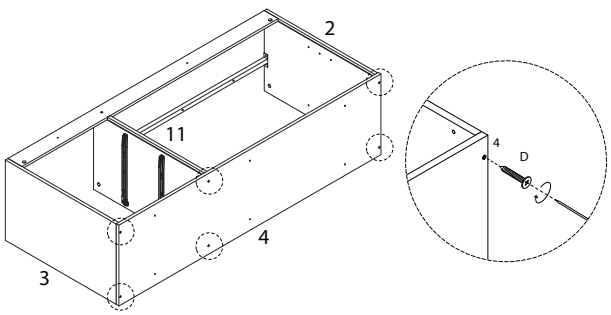

10

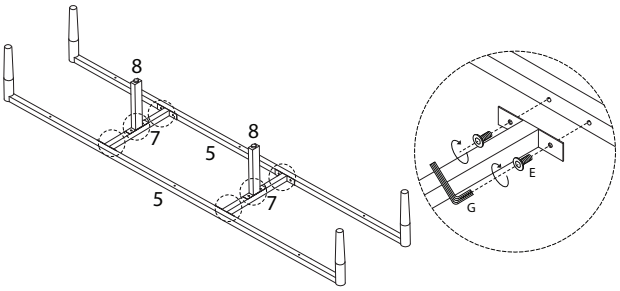

11

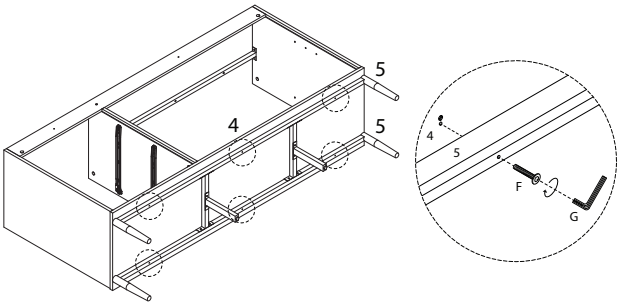

12

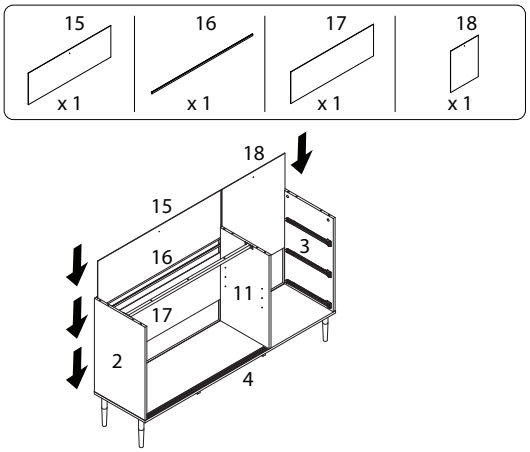

13

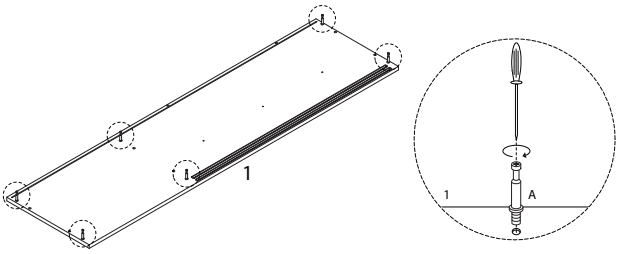

14

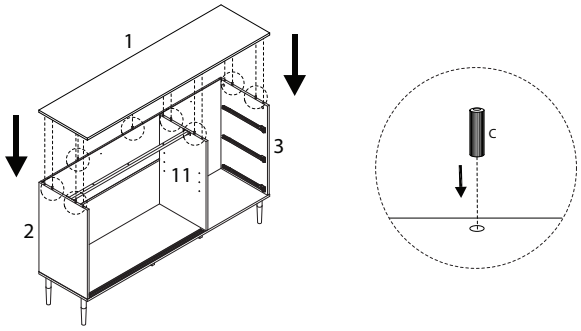

15

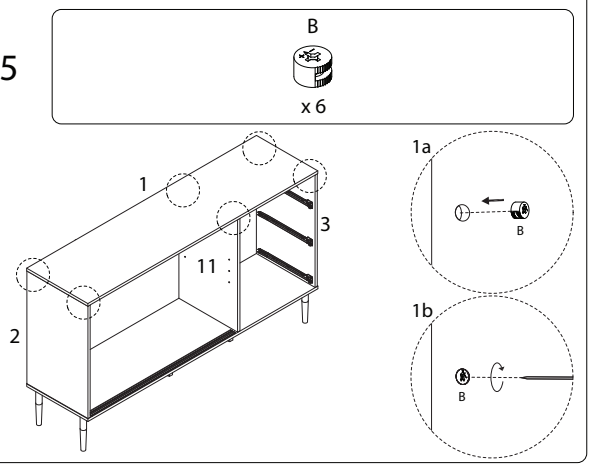

16

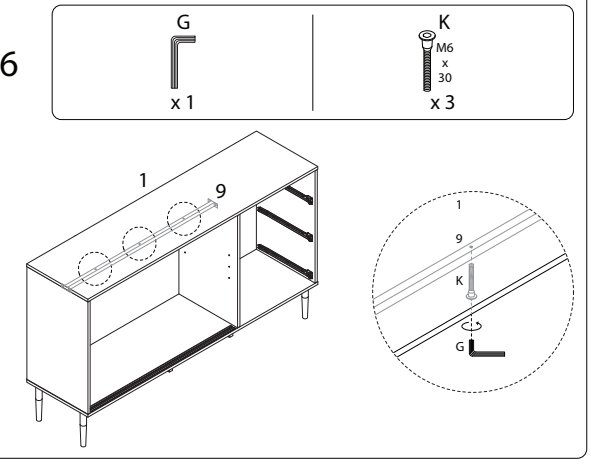

17

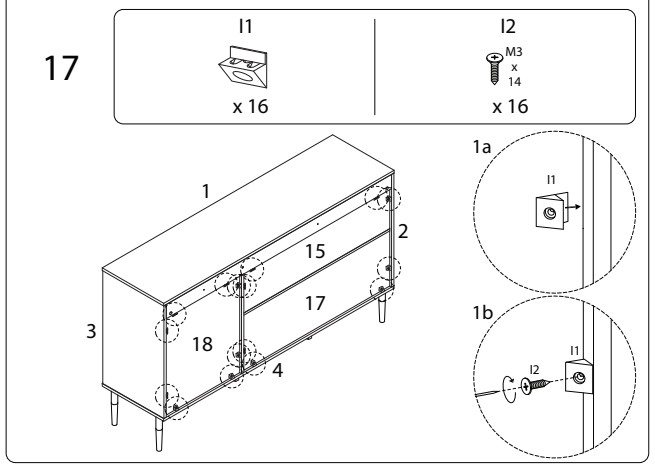

18

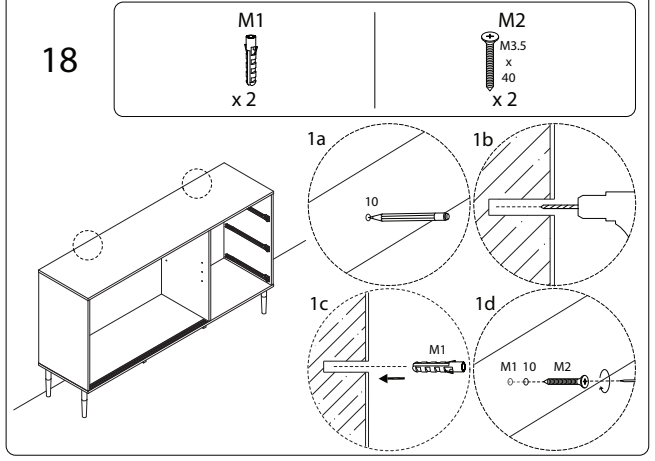

19

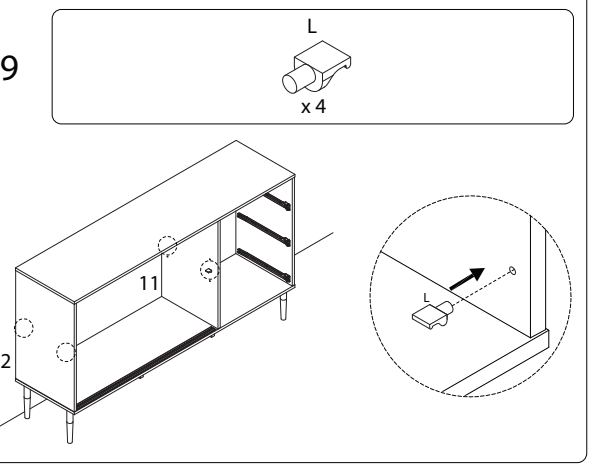

20

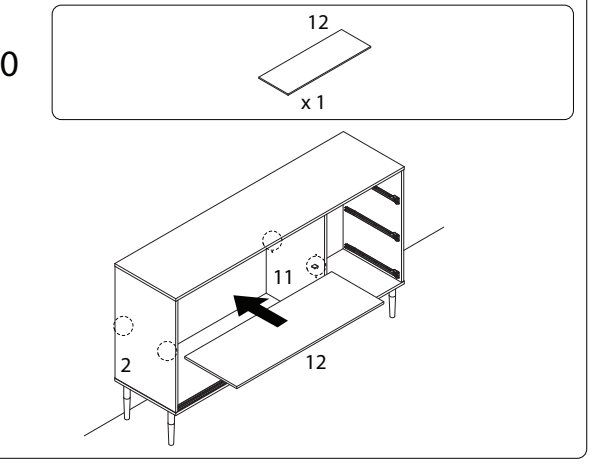

21

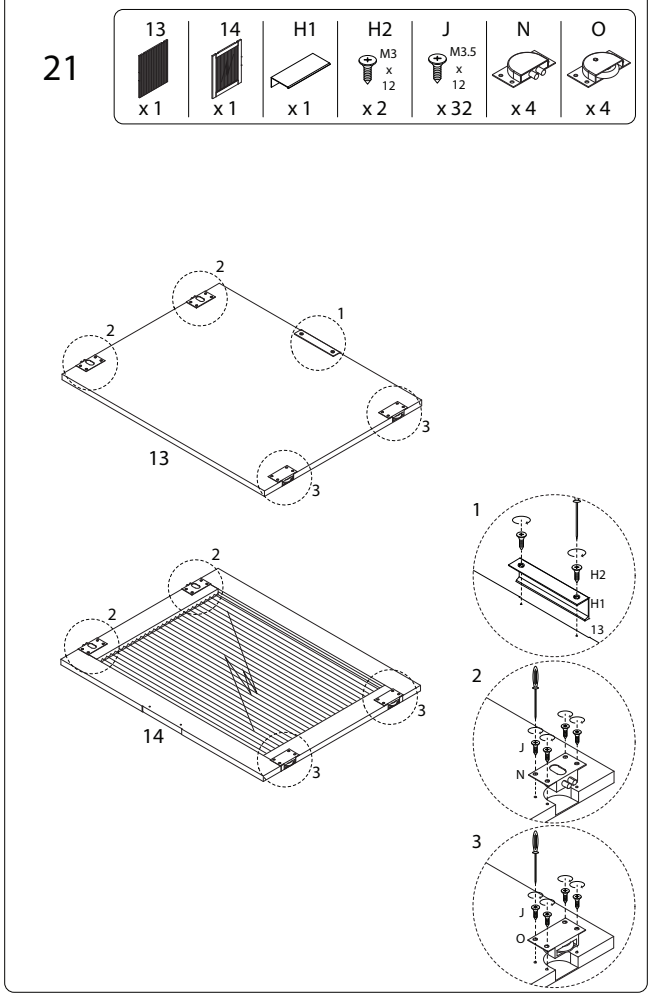

22

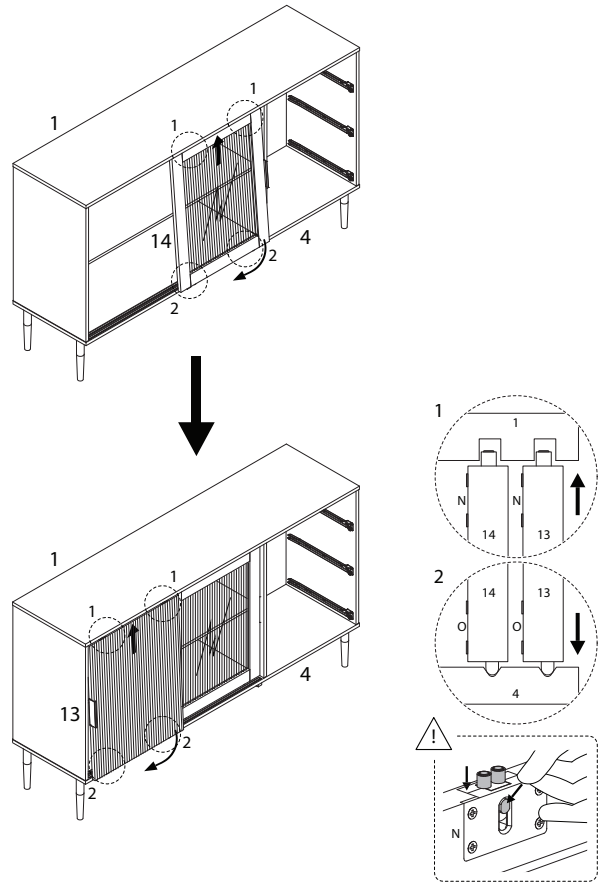

!

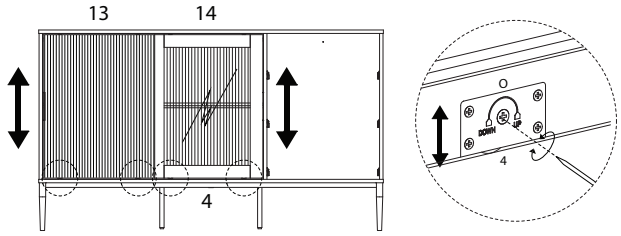

23

H1	H2
x 1	M3 x 12 x 2

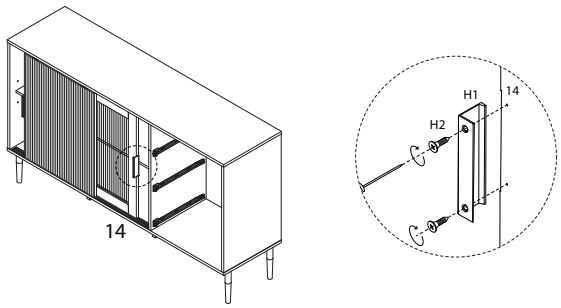

24

P
x 1

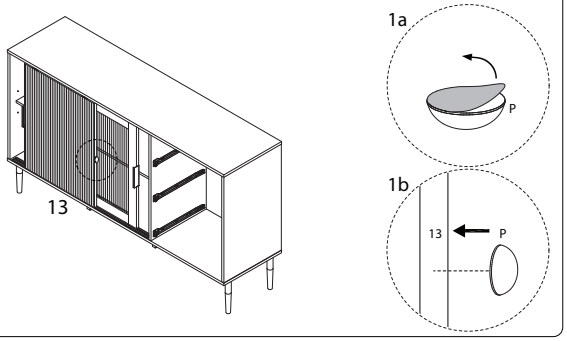

26 x 3

20	21	22	D
x 1	x 1	x 1	M4 x 35 x 4

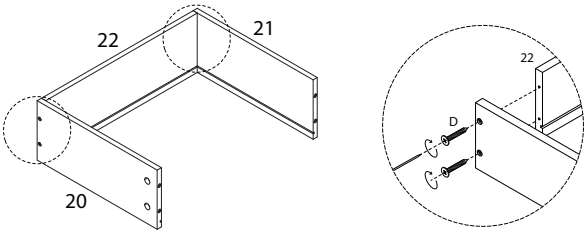

25 x 3

19	A	H1	H2
x 1	x 4	x 1	M3 x 12 x 2

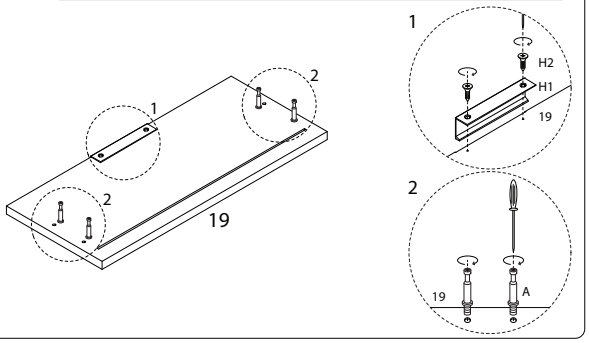

27 x 3

23
x 1

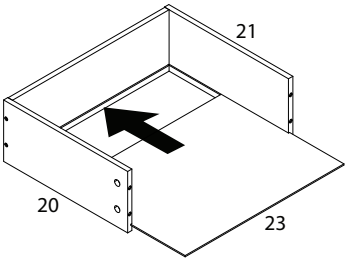

28 x 3

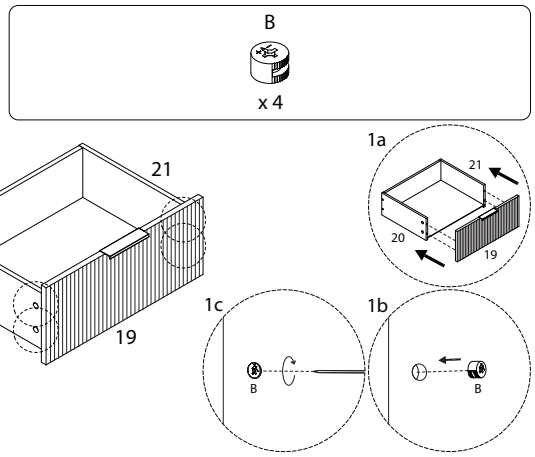
B
x 4
21
20
19
1a
21
20
19
1c
B
1b
B

29 x 3

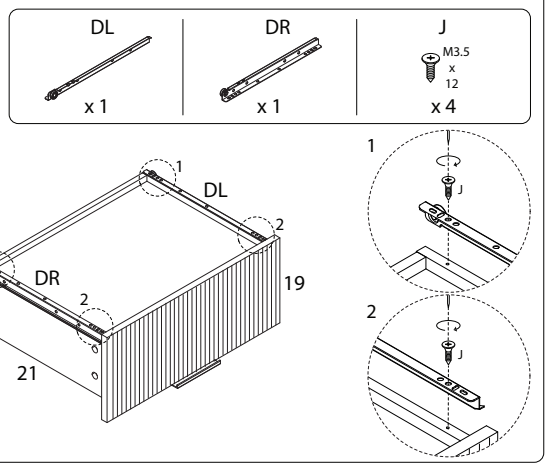
DL
x 1
DR
x 1
J
M3.5
x
12
x 4
1
DL
2
1
DR
2
19
21
1
J
2
J

30

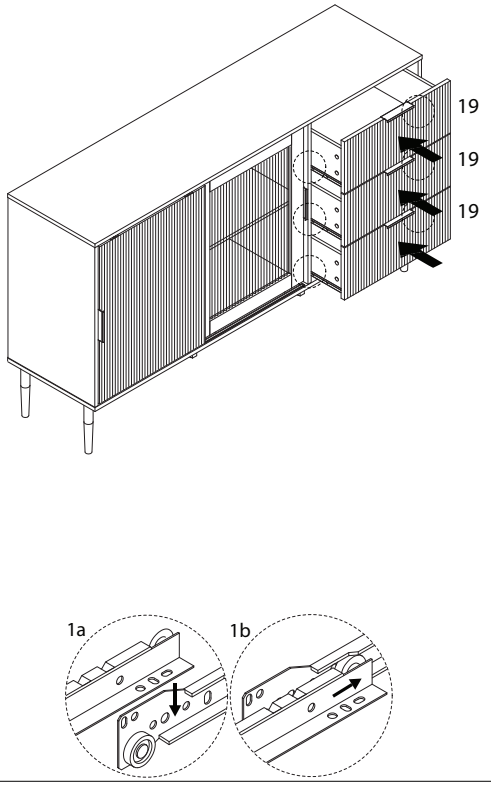
19
19
19
1a
1b