BOUSSE

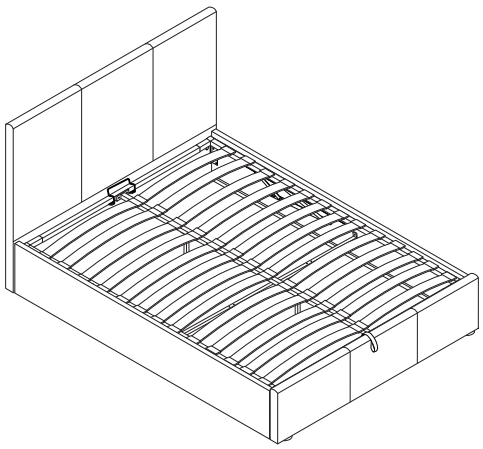

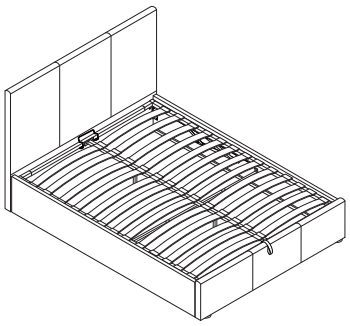

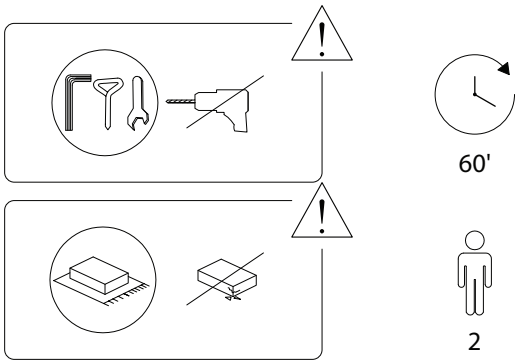

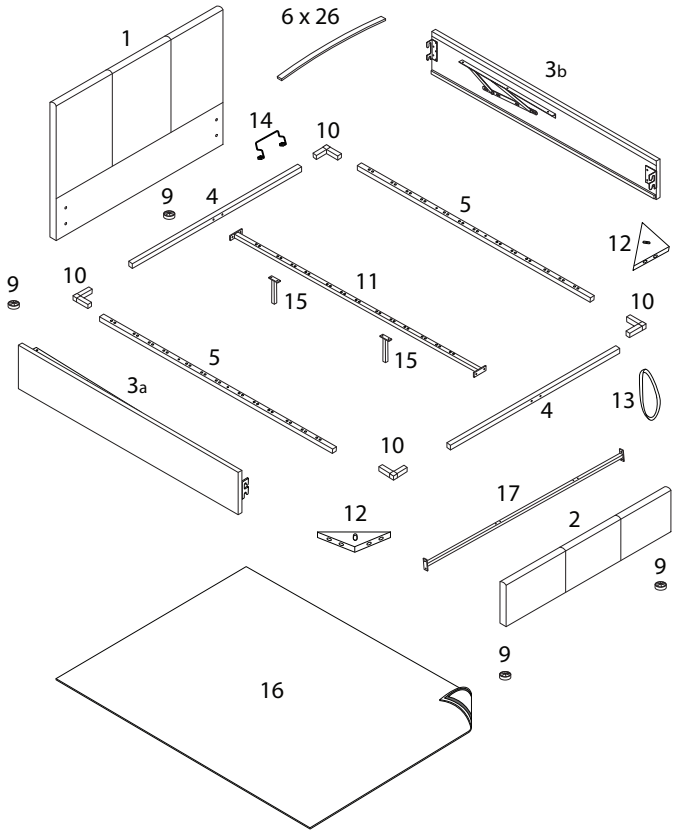

1 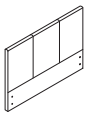 x 1	2 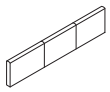 x 1	3a 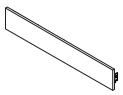 x 1	3b 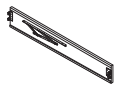 x 1
4 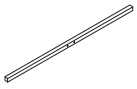 x 2	5  x 2	6 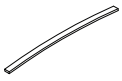 x 26	7 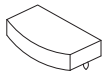 x 26
8 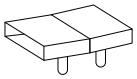 x 13	9  x 4	10 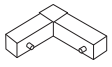 x 4	11  x 1
12 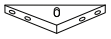 x 2	13  x 1	14  x 1	15  x 2
16  x 1		17 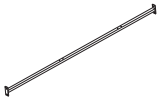 x 1	

A	B
 M8 x 30	 M8 x 40
x 16	x 14
C	D
	
x 14	x 8
E	F
	
x 8	x 1
G	H
	
x 1	x 1
I	J
 M8 x 25	 M4 x 40
x 4	x 4

2057/BOUSSE/280425/

1

1	2	A	D	E	F
x 1	x 1	M8 x 30 x 8	x 8	x 8	x 1

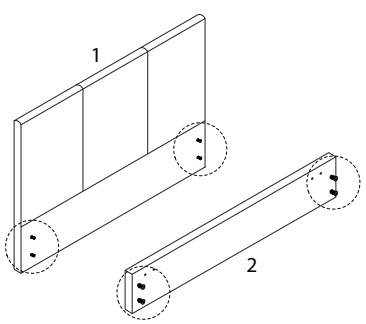

2

3a	3b	F
x 1	x 1	x 1

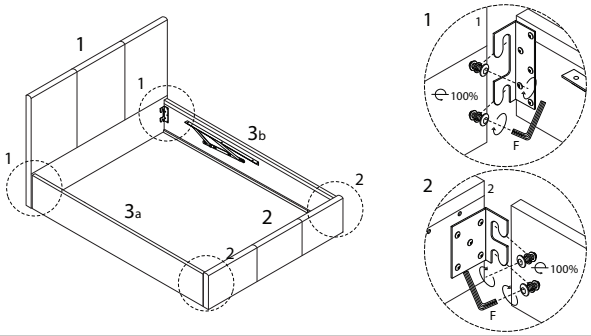

2057/BOUSSE/280425/

3

12	A	F
x 2	M8 x 30 x 8	x 1

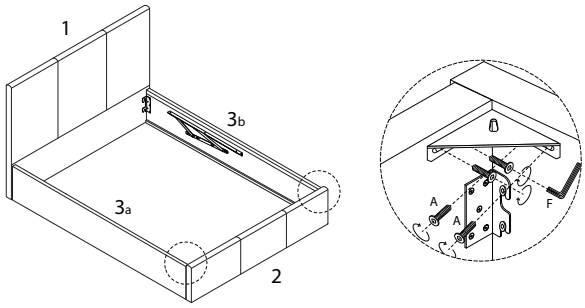

5

11	B	C	H	G
x 1	M8 x 40 x 4	x 4	x 1	x 1

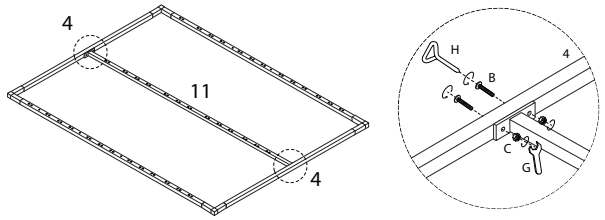

4

4	5	10
x 2	x 2	x 4

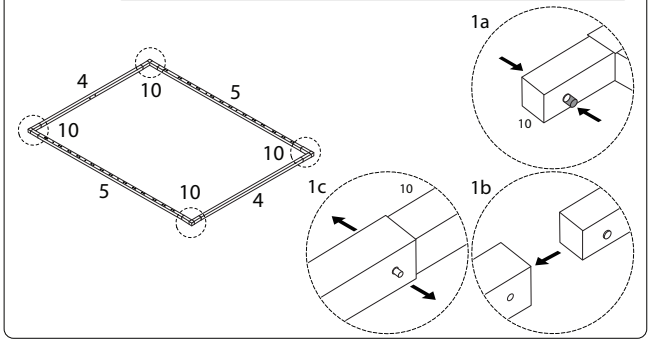

2057/BOUSSE/280425/

6

14
x 1

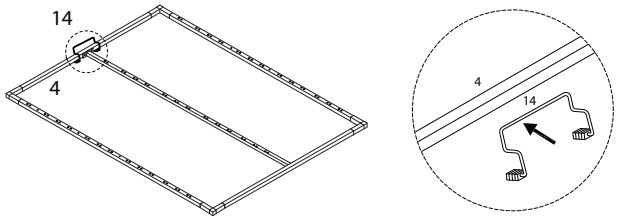

2057/BOUSSE/280425/

7

13
x 1

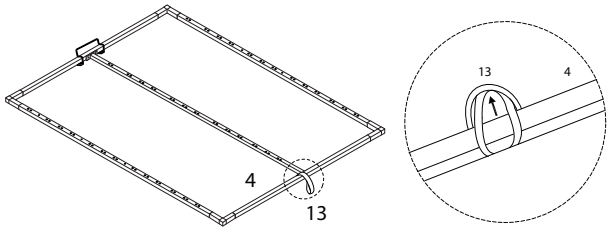

8

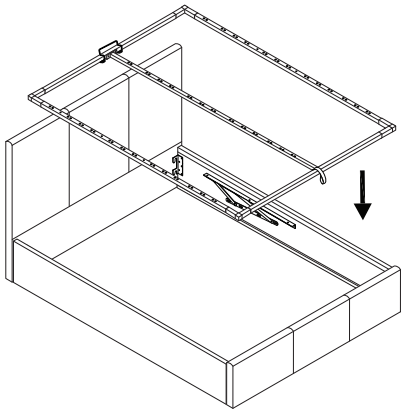

8/13

9

B	C	G	H
M8 x 40			
x 6	x 6	x 1	x 1

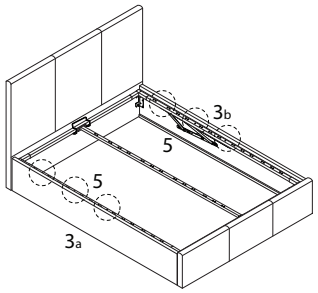

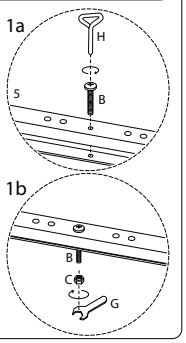

10

B	C	G	H
M8 x 40			
x 4	x 4	x 1	x 1

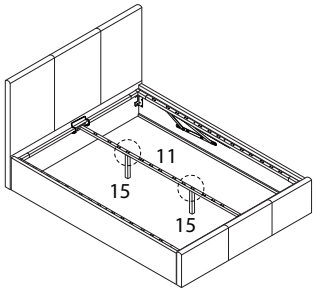

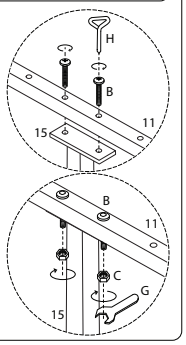

9/13

11

H
x 1

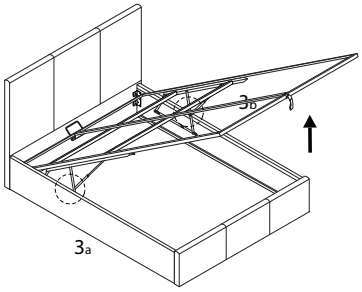

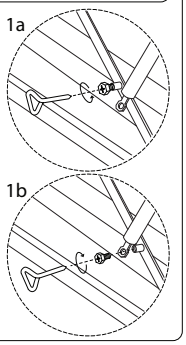

13 x 13

6	7	8
x 2	x 2	x 1

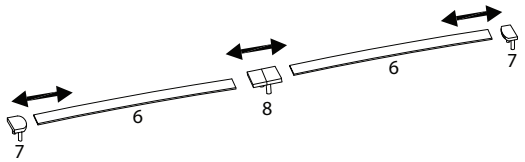

12

17	I	F
	M8 x 25	
x 1	x 4	x 1

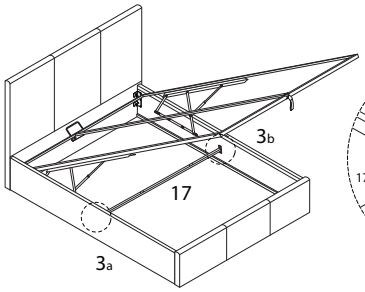

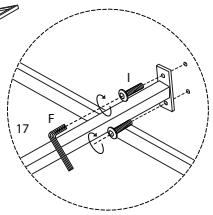

10/13

!

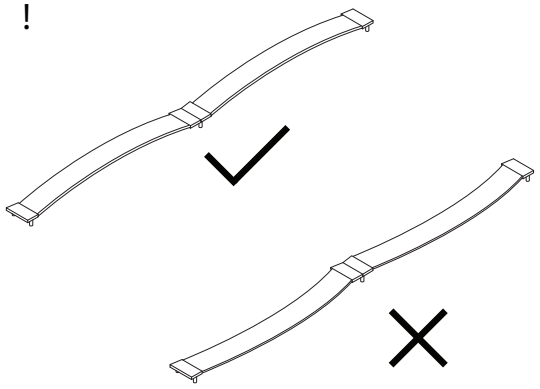

11/13

14

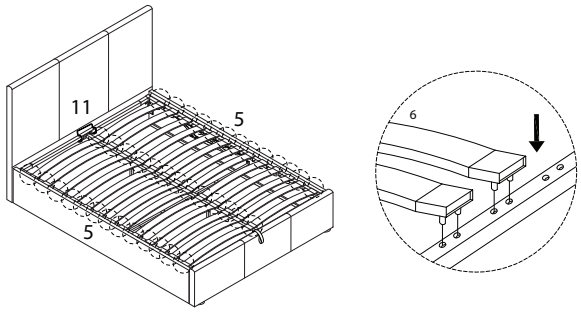

15

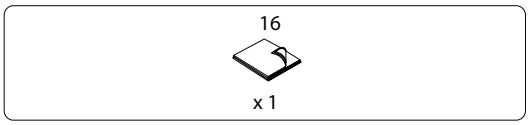

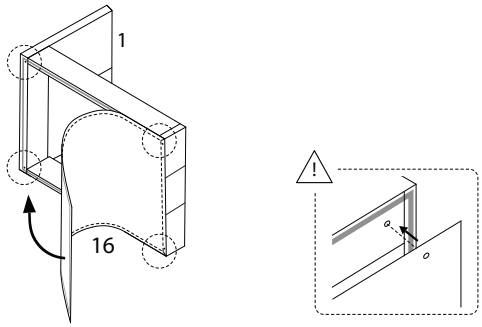

16

