BENDIGO

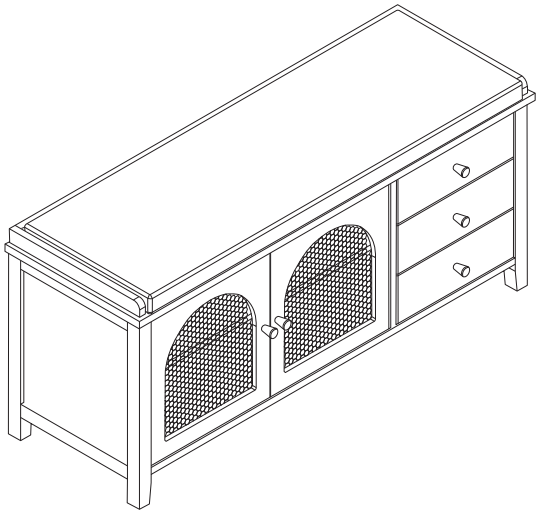

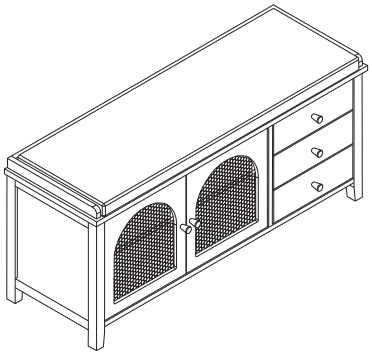

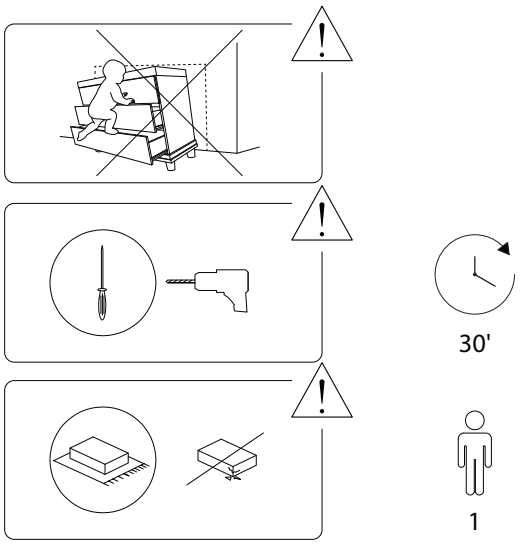
30'
1

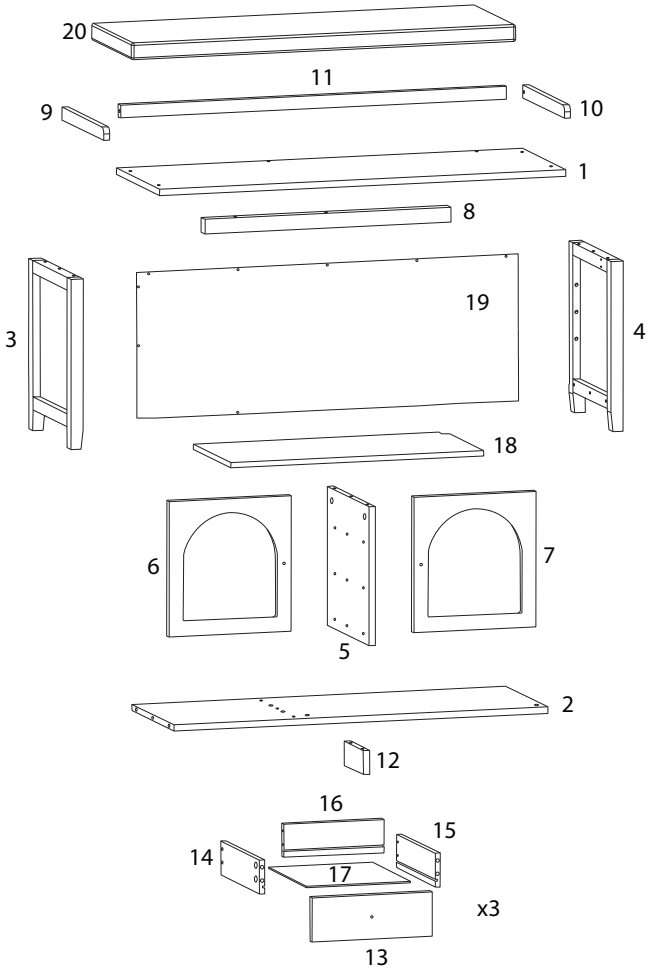
20
11
9
10
1
8
3
19
4
18
6
7
5
2
12
16
15
14
17
x3
13

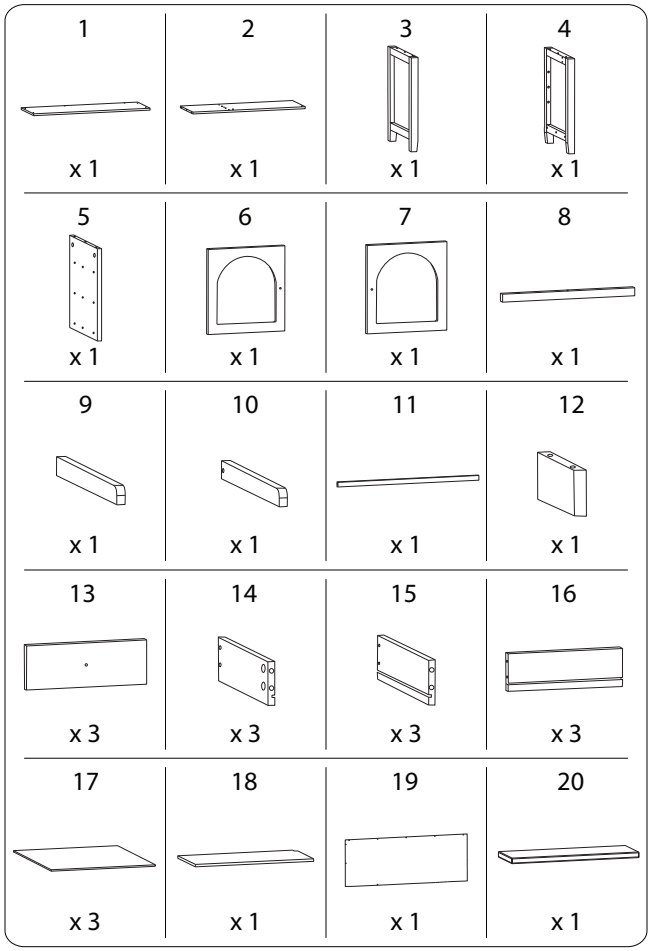
1
x 1
2
x 1
3
x 1
4
x 1
5
x 1
6
x 1
7
x 1
8
x 1
9
x 1
10
x 1
11
x 1
12
x 1
13
x 3
14
x 3
15
x 3
16
x 3
17
x 3
18
x 1
19
x 1
20
x 1

A	B	C	D	E
x 20	x 20	x 12	M4 x 40 x 9	M4 x 30 x 20
F1	**F2**	**G1**	**G2**	**Z**
x 1	M3 x 16 x 2	x 2	M3 x 10 x 2	x 2
Y	**J**	**K**	**L**	**CL**
x 2	M3 x 12 x 16	x 5	M4 x 18 x 5	x 3
CR	**DL**	**DR**	**Q**	**R**
x 3	x 3	x 3	M4 x 12 x 36	x 2
S	**X**	**U**	**V**	**W**
M2.5 x 10 x 16	x 4	x 4	x 2	x 4

1

8	J	R
x 1	M3 x 12 x 4	x 2

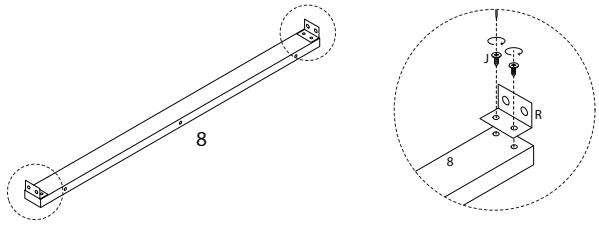

2

3	4	A
x 1	x 1	x 4

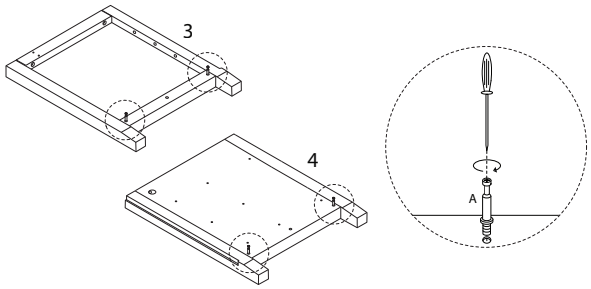

3

5	CR	CL	Q
x 1	x 3	x 3	M4 x 12 x 18

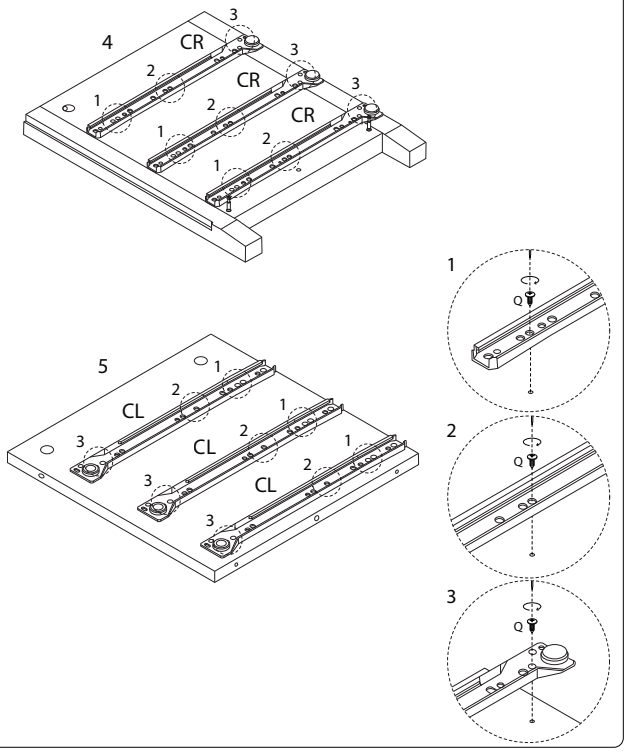

4

6	7	G1	G2	K	L
x 1	x 1	x 2	M3 x 10 x 2	x 2	M4 x 18 x 2

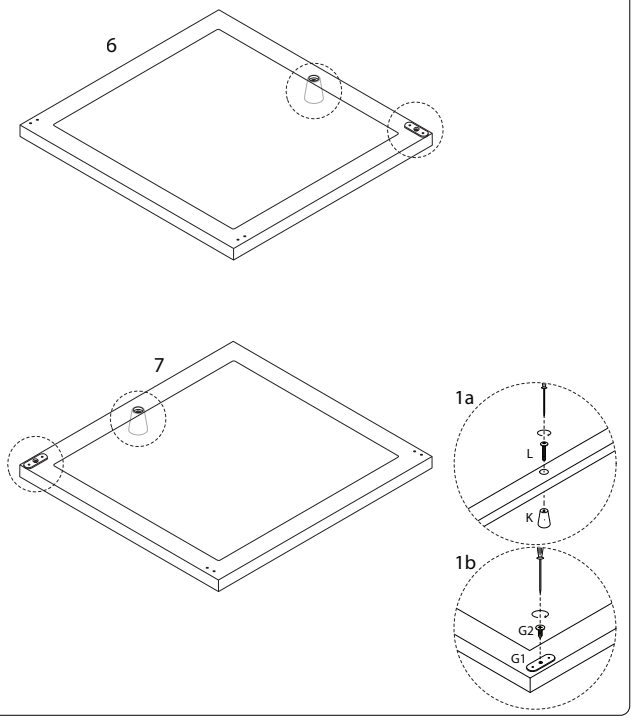

5

2	12	D
x 1	x 1	M4 x 40 x 2

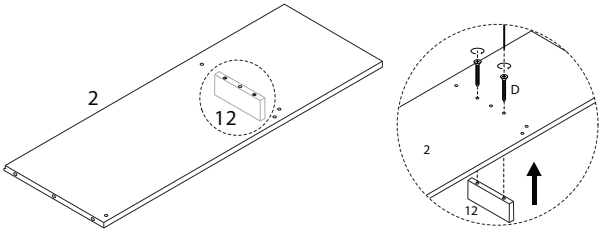

6

C
x 3

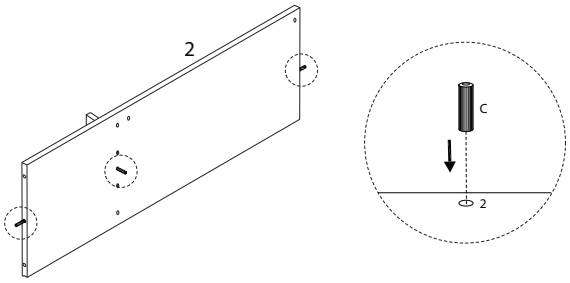

7

D
M4 x 40 x 2

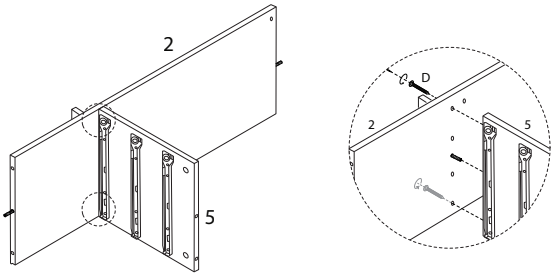

8

B
x 2

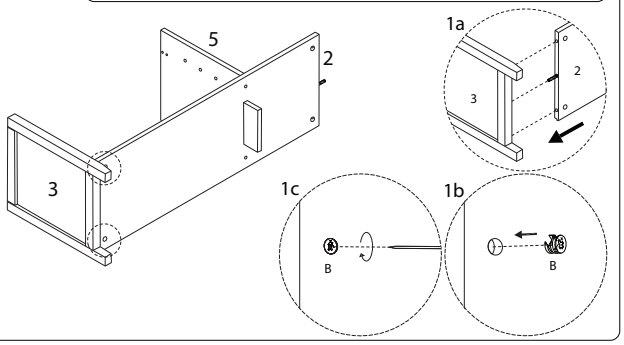

9

B
x 2

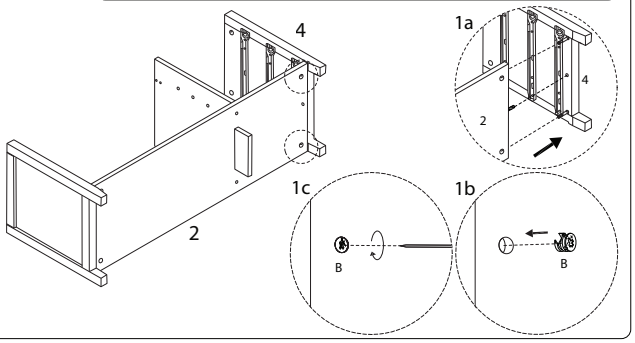

11

C
x 3

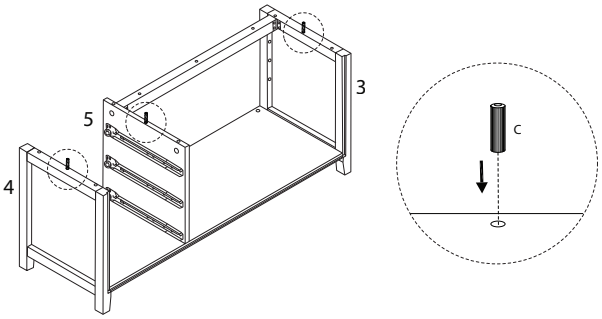

10

J
M3 x 12 x 4

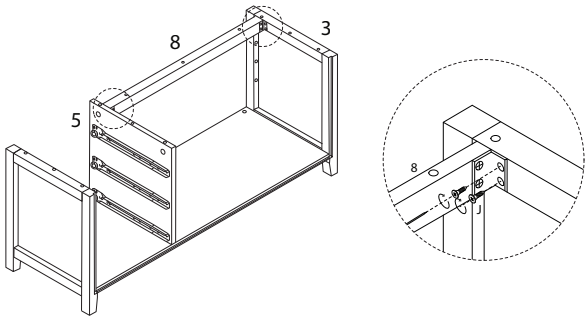

12

1	A	F1	F2
x 1	x 4	x 1	M3 x 16 x 2

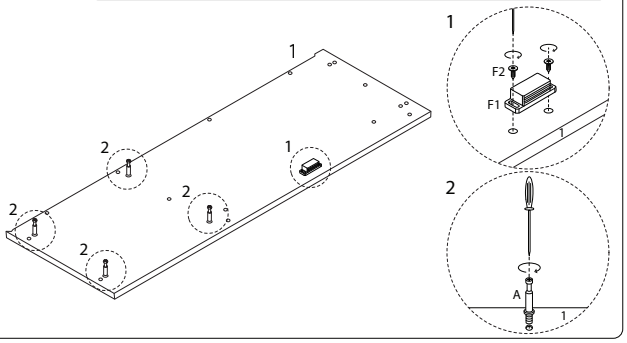

13

9	10	11	C
x 1	x 1	x 1	x 6

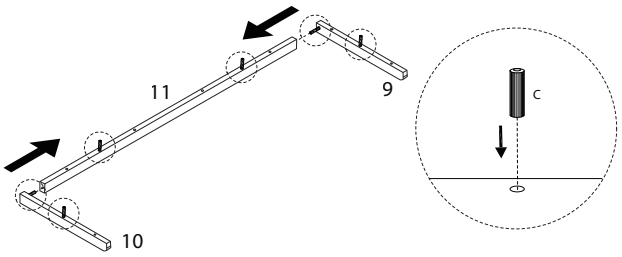

14

E
M4 x 30
x 8

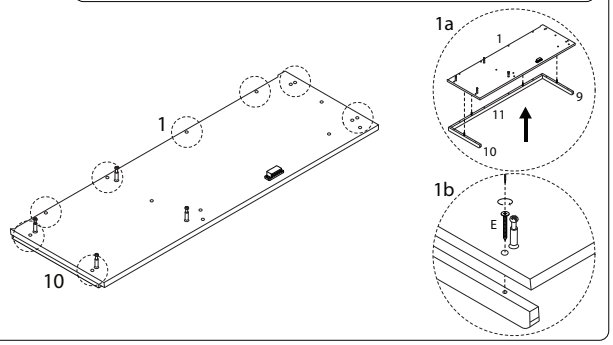

15

B
x 4

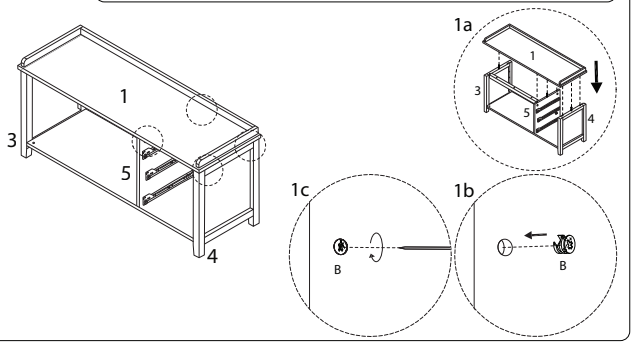

16

D
M4 x 40
x 5

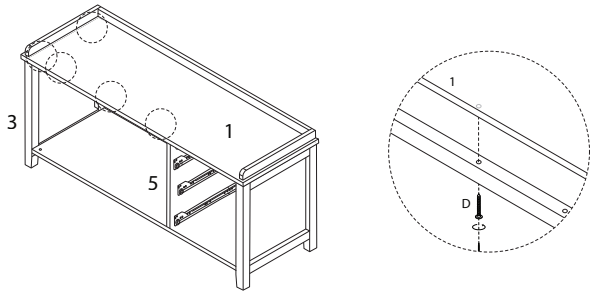

17

U	V
x 4	x 2

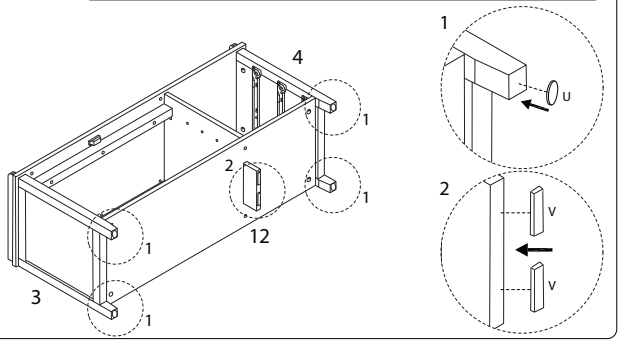

18

19	S
x 1	M2.5 x 10
	x 16

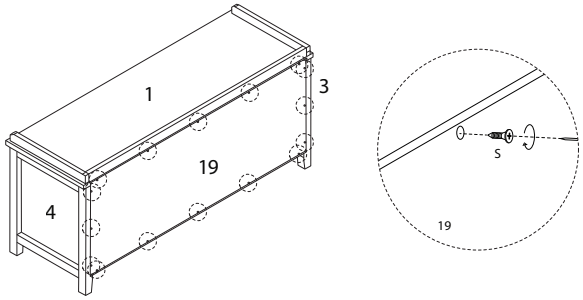

19

X
x 4

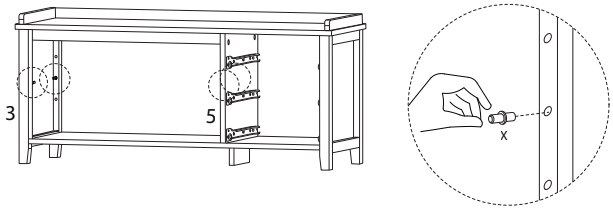

20

18
x 1

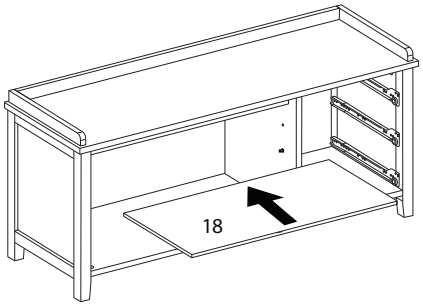

21

Z	Y	W
x 2	x 2	x 4

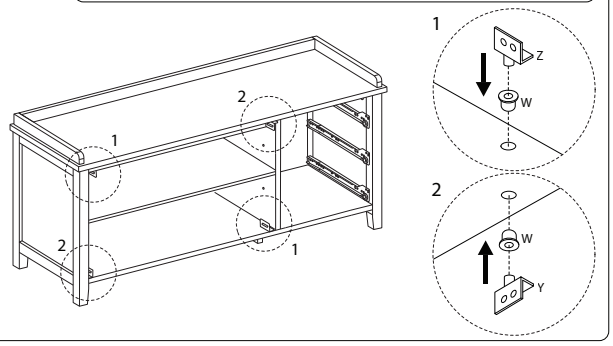

22

J
M3 x 12
x 8

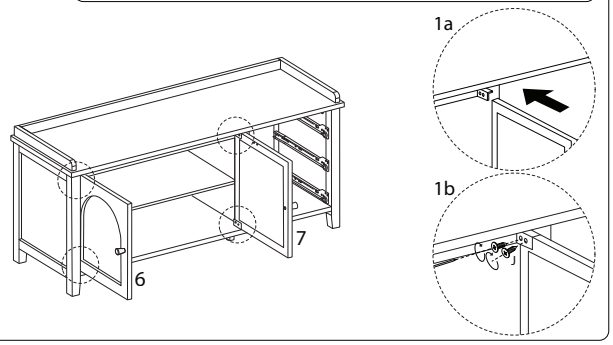

22 x 3

14	15	16	E
x 1	x 1	x 1	M4 x 30 x 4

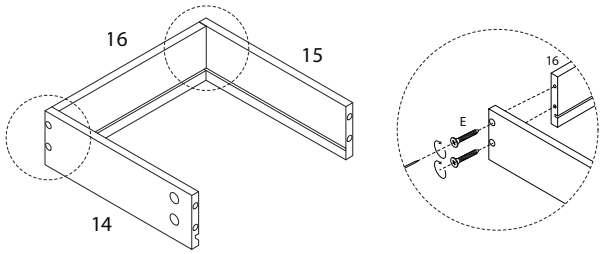

23 x 3

17
x 1

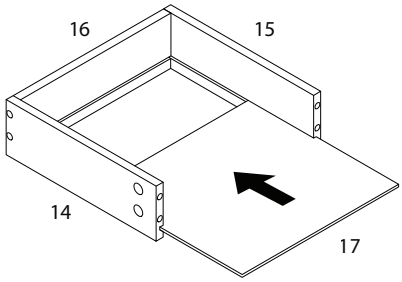

24 x 3

13	A	C	L
x 1	x 4	x 1	M4 x 18 x 1

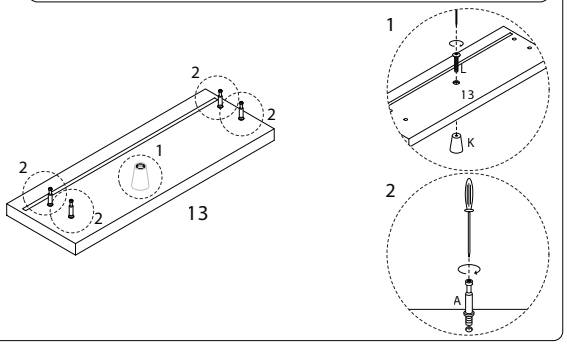

26 x 3

DL	DR	Q
x 1	x 1	M4 x 12 x 4

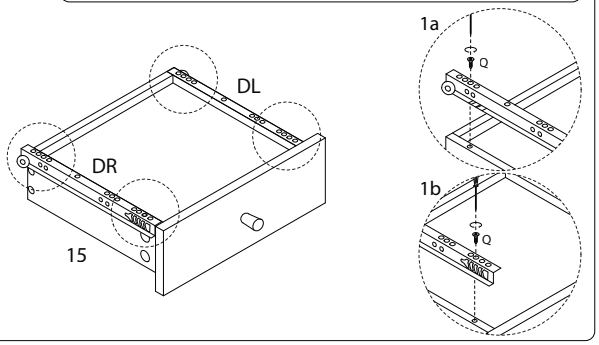

25 x 3

B
x 4

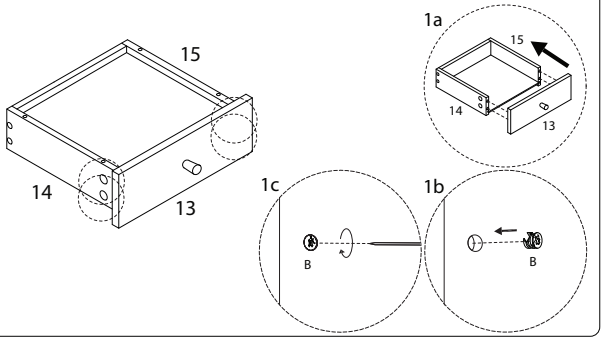

27
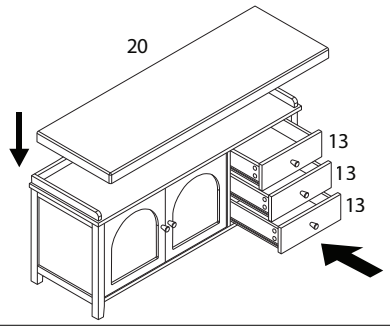
20
x 1