BONAIRE

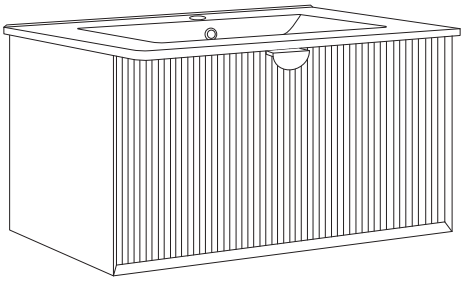

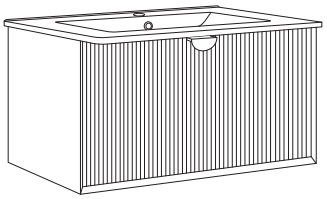

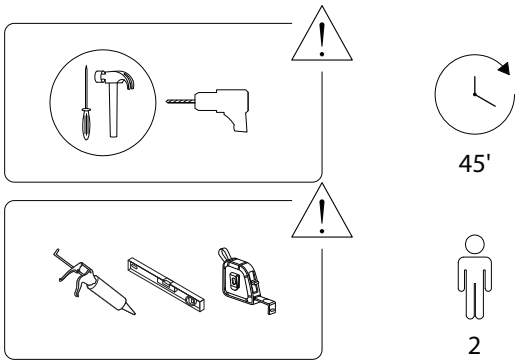

2353/BONAIRE/290825/

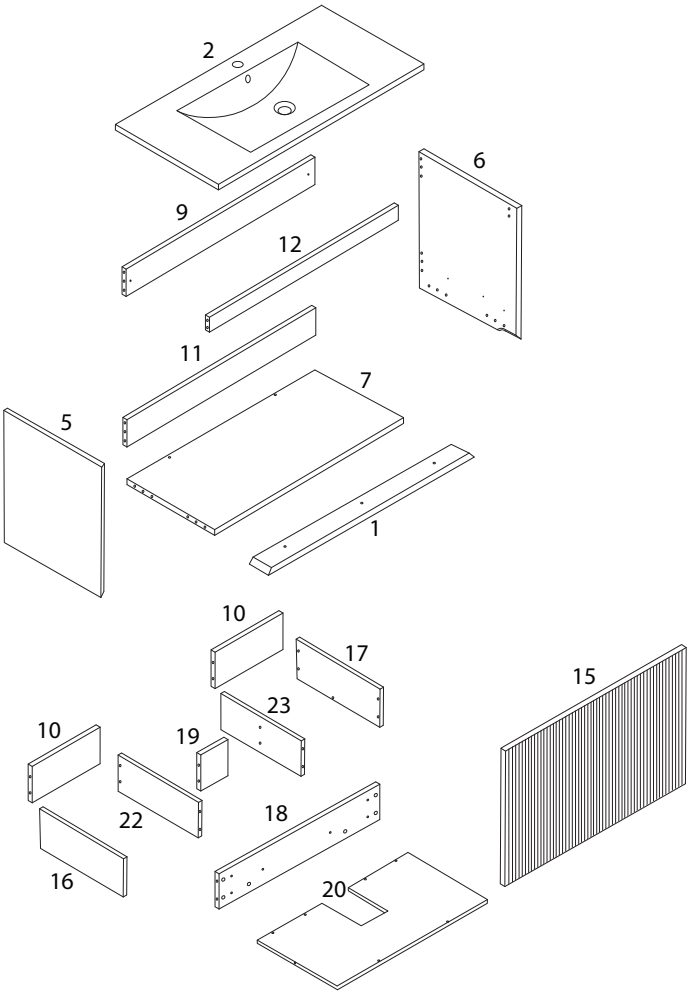

2353/BONAIRE/290825/

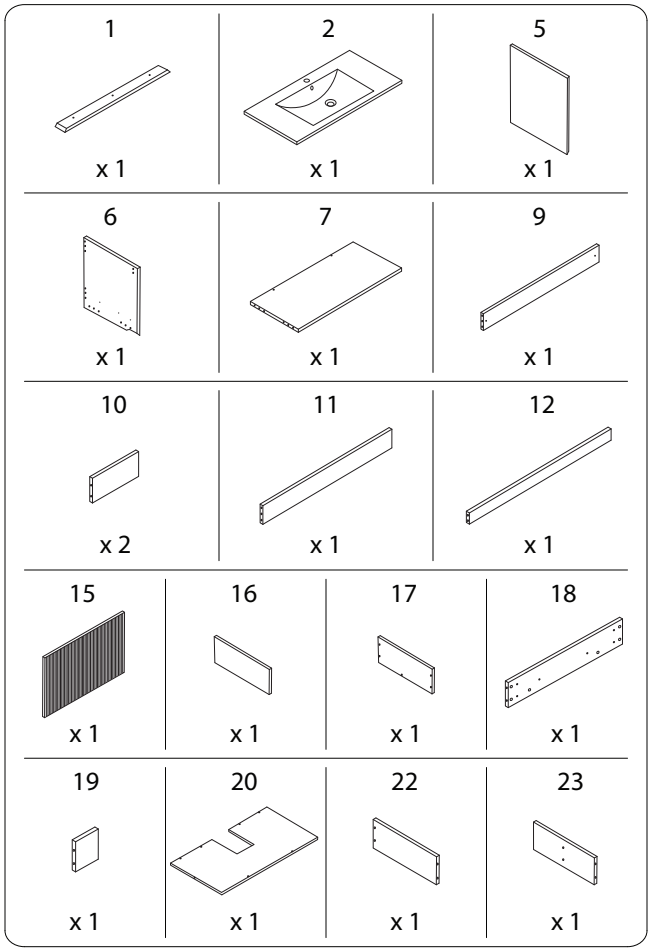

2353/BONAIRE/290825/

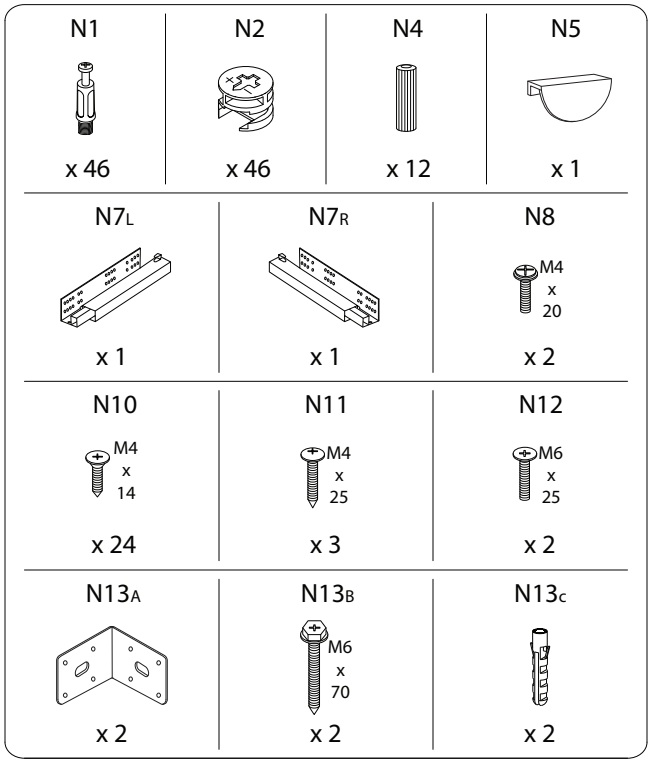
N1
x 46
N2
x 46
N4
x 12
N5
x 1
N7L
x 1
N7R
x 1
N8
M4 x 20
x 2
N10
M4 x 14
x 24
N11
M4 x 25
x 3
N12
M6 x 25
x 2
N13A
x 2
N13B
M6 x 70
x 2
N13C
x 2

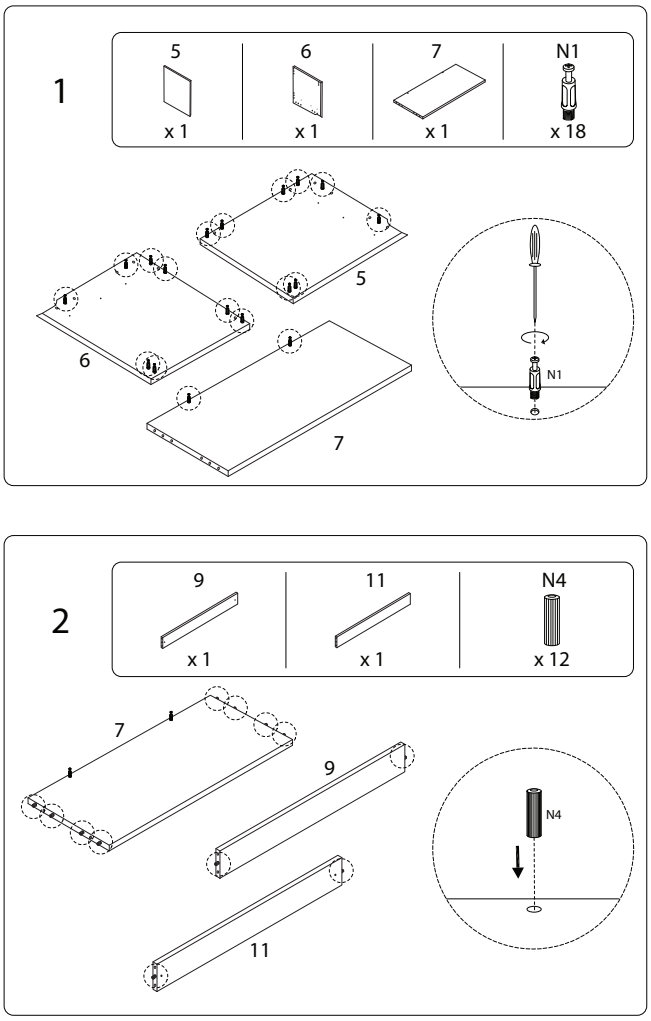
1
5
x 1
6
x 1
7
x 1
N1
x 18
5
6
7
N1
2
9
x 1
11
x 1
N4
x 12
7
9
11
N4

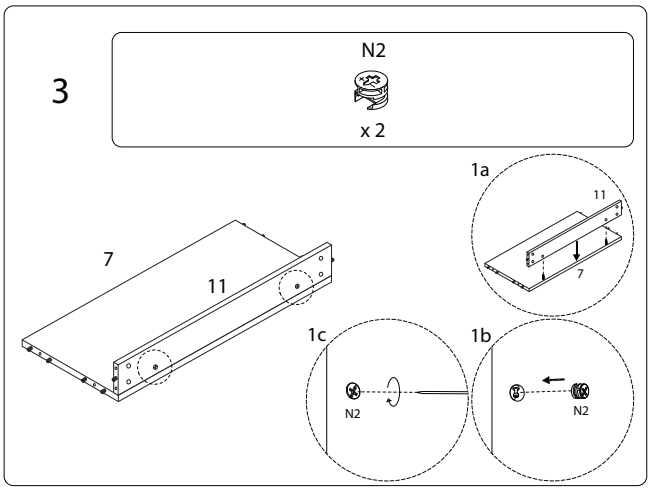
3
N2
x 2
1a
11
7
7
11
1c
1b
N2
N2

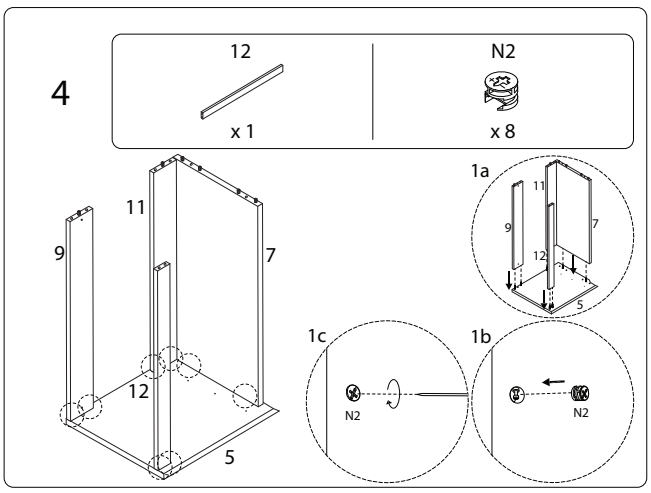
4
12
x 1
N2
x 8
1a
11
9
7
12
5
11
9
7
12
5
1c
1b
N2
N2

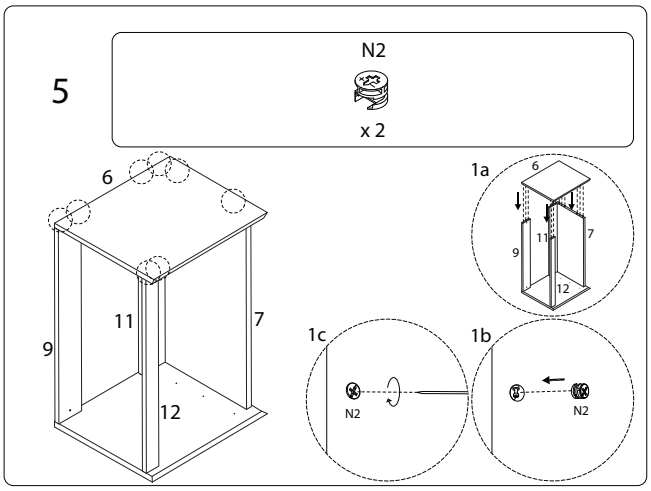
5
N2
x 2
6
1a
6
11
7
9
12
11
7
9
12
1c
1b
N2
N2

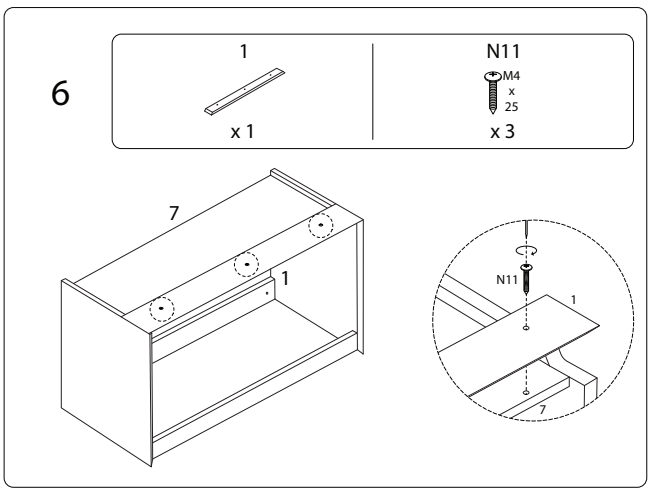
6
1
x 1
N11
M4 x 25
x 3
7
1
N11
1
7

7

N7R	N10
x 1	x 3

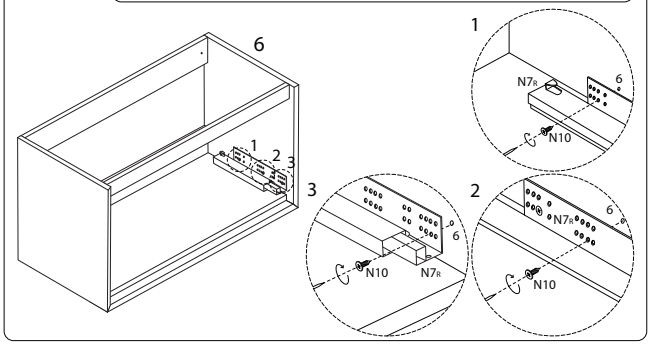

8

N7L	N10
x 1	x 3

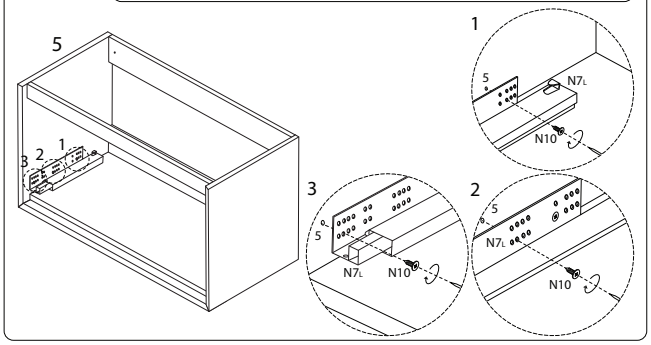

9

16	17	18	20	22	23	G
x 1	x 1	x 1	x 1	x 1	x 1	x 28

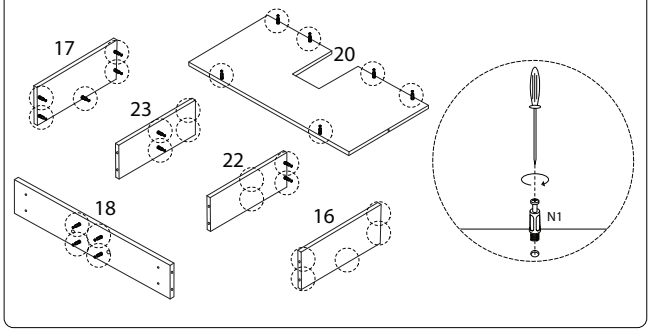

10

19	N2
x 1	x 4

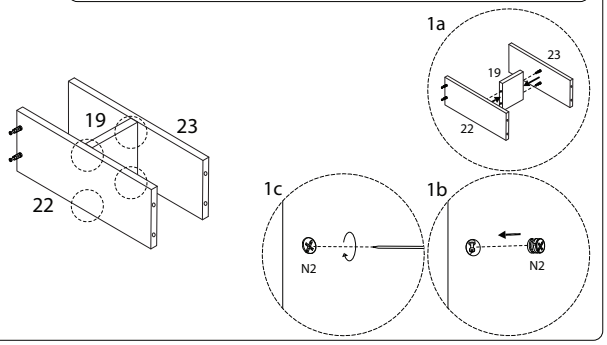

11

10	N2
x 2	x 8

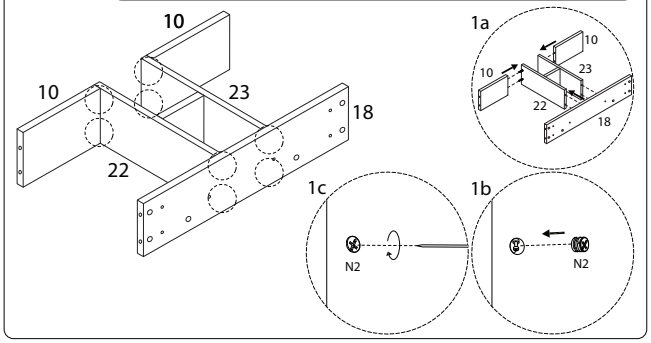

12

N2
x 4

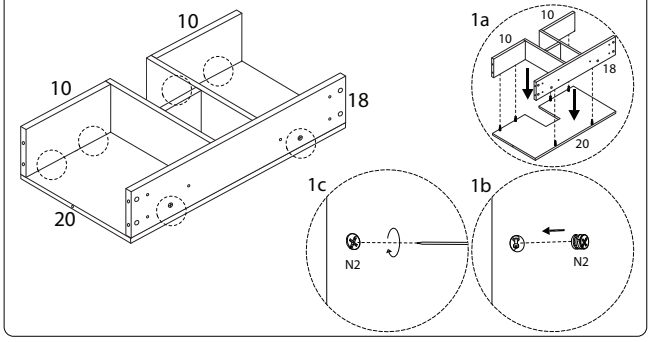

13

N2
x 10

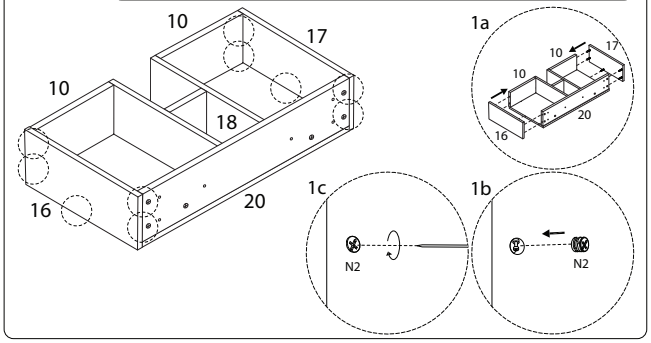

14

15	N12
x 1	x 2

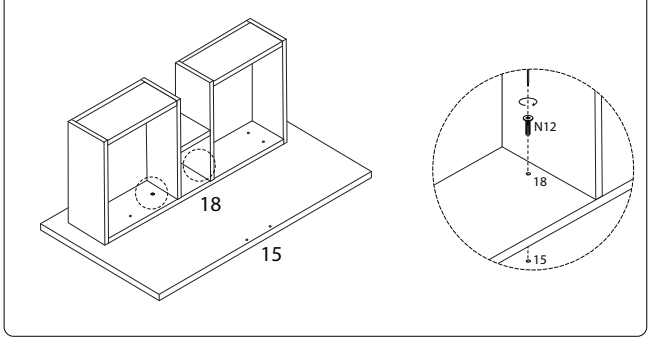

15

N5	N8
x 1	M6 x 25 x 2

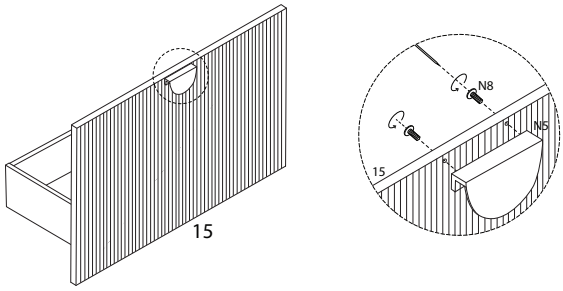

16

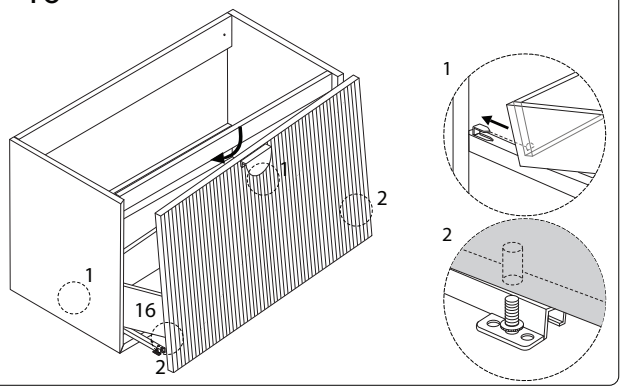

17

N10
M4 x 14 x 2

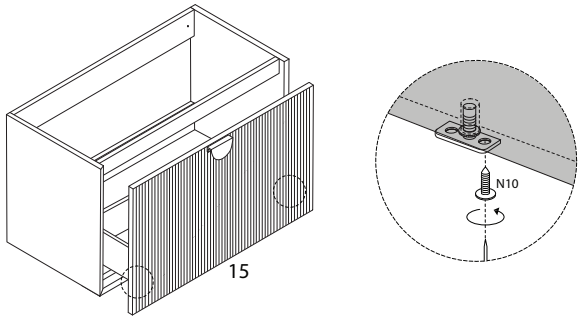

18

N11
M4 x 25 x 4

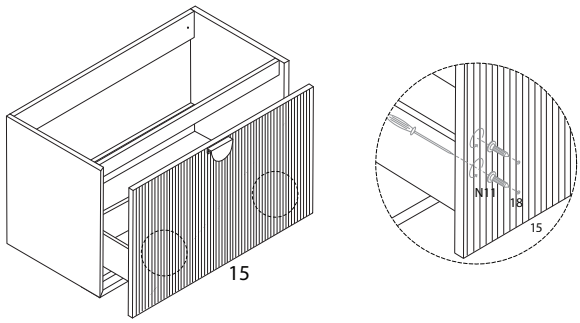

19

N10	N13A
M4 x 14 x 16	x 2

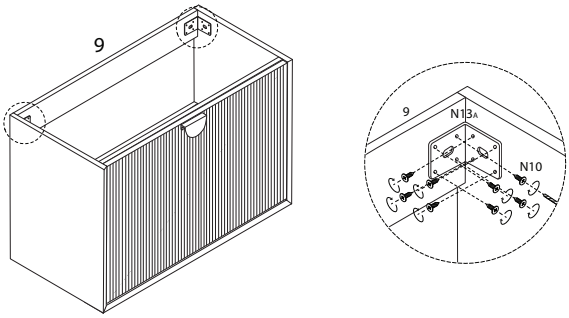

20

N13B	N13C
M6 x 70 x 2	x 2

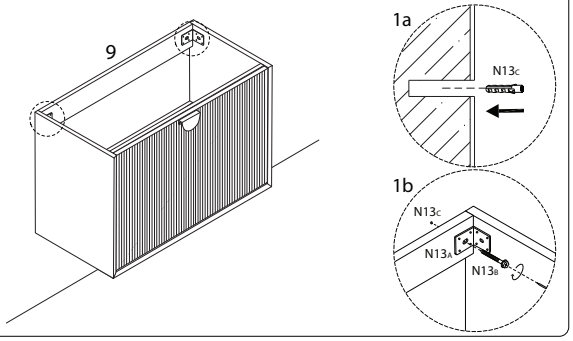

21

2
x 1

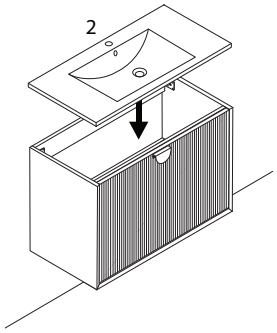

!

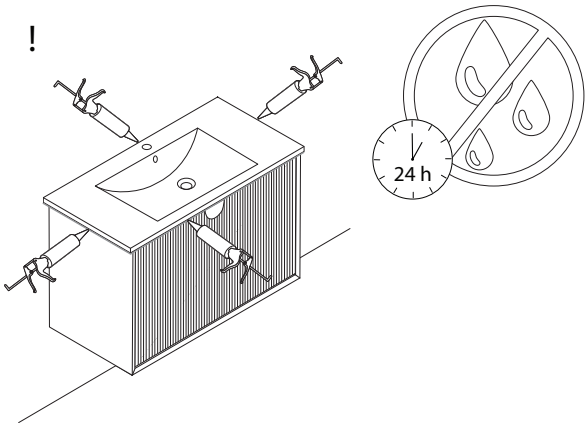

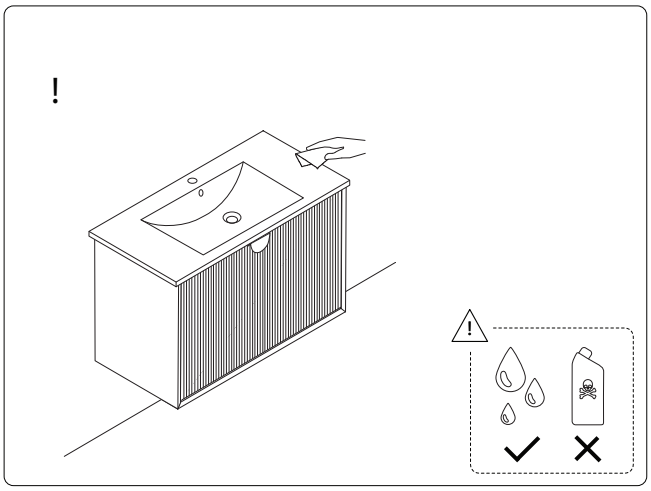

2353/BONAIRE/290825/