SELAH

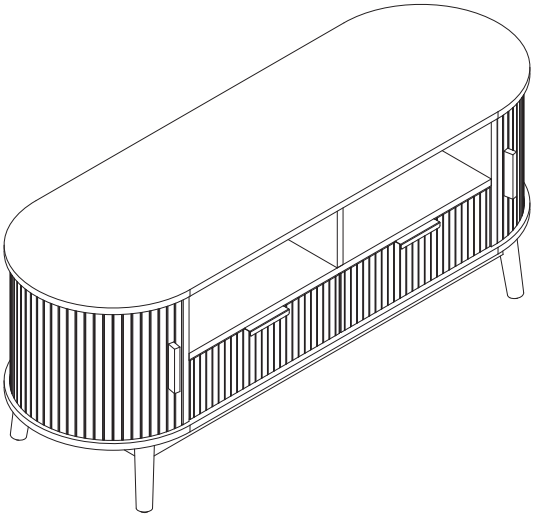

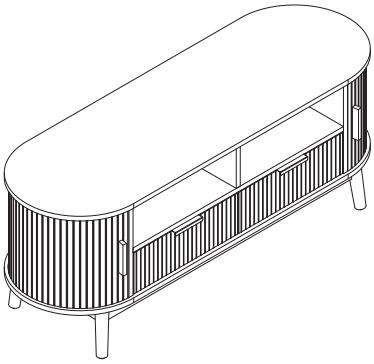

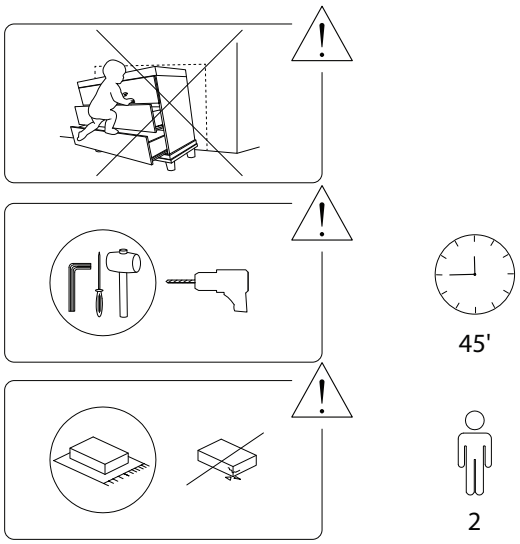
45'
2

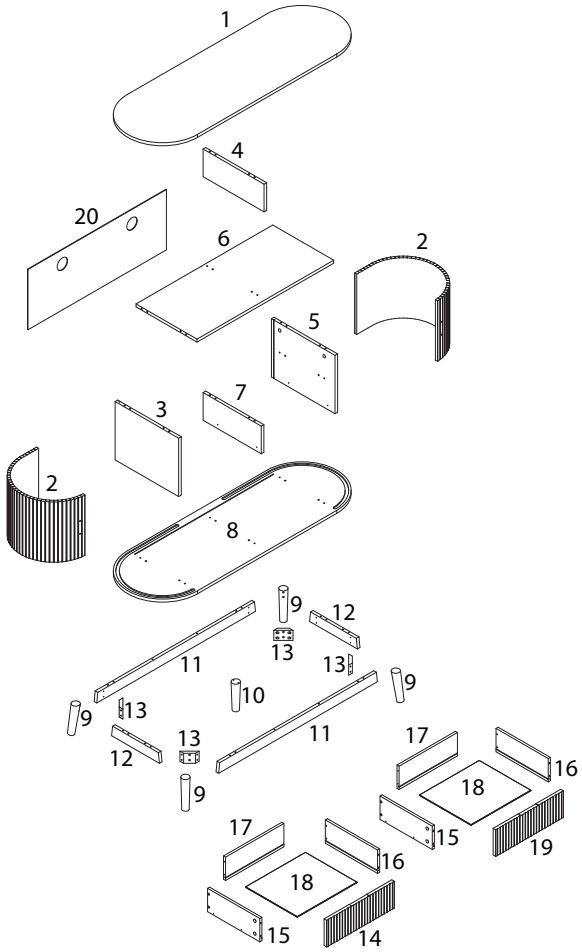
1
4
20
6
2
5
3
7
2
8
9
12
13
11
13
10
9
9
13
12
13
11
17
16
18
9
17
16
18
15
19
15
14

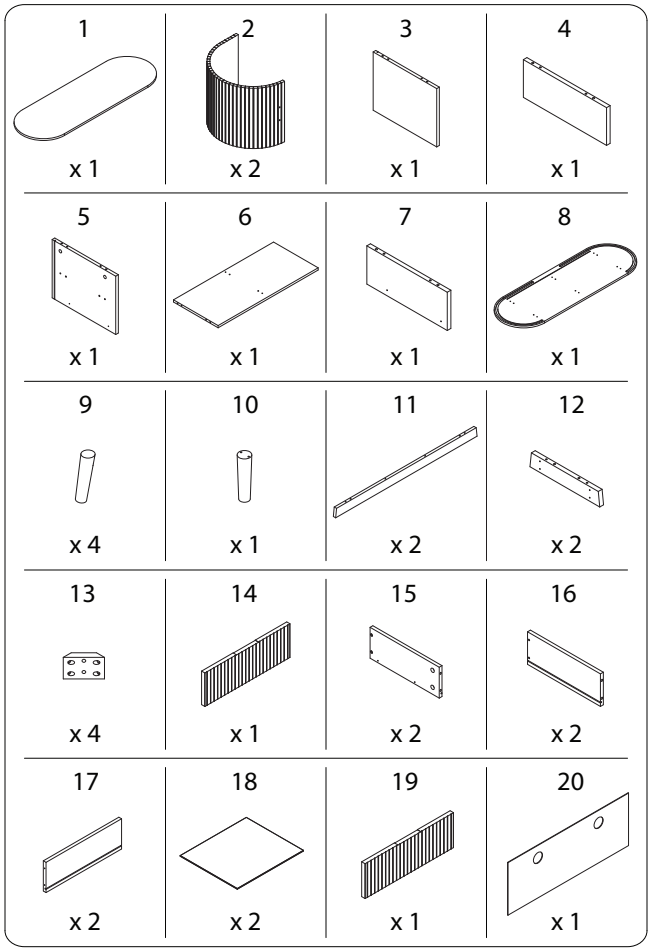
1
x 1
2
x 2
3
x 1
4
x 1
5
x 1
6
x 1
7
x 1
8
x 1
9
x 4
10
x 1
11
x 2
12
x 2
13
x 4
14
x 1
15
x 2
16
x 2
17
x 2
18
x 2
19
x 1
20
x 1

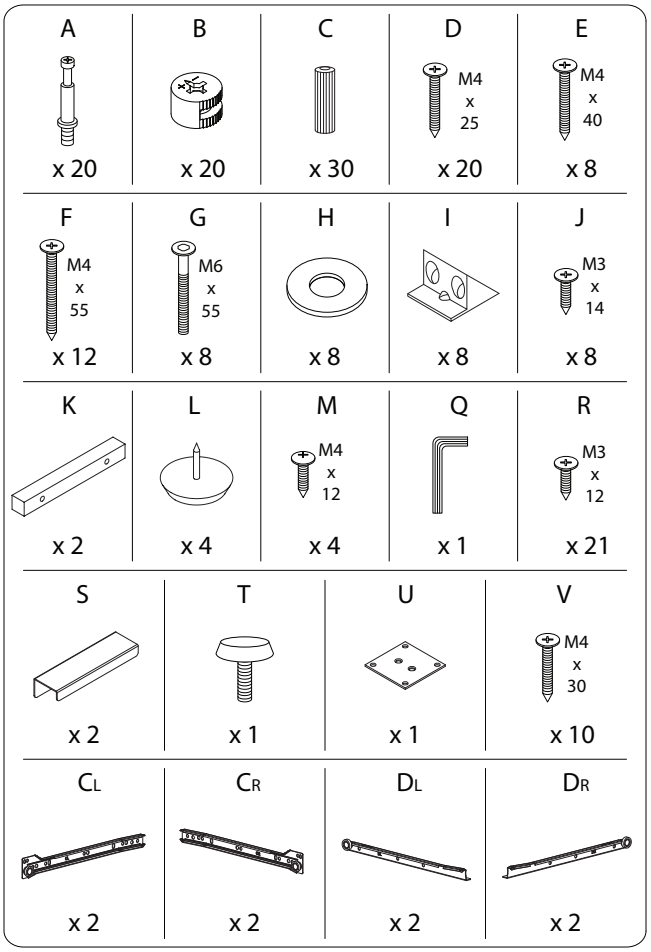
A
x 20
B
x 20
C
x 30
D
M4 x 25
x 20
E
M4 x 40
x 8
F
M4 x 55
x 12
G
M6 x 55
x 8
H
x 8
I
x 8
J
M3 x 14
x 8
K
x 2
L
x 4
M
M4 x 12
x 4
Q
x 1
R
M3 x 12
x 21
S
x 2
T
x 1
U
x 1
V
M4 x 30
x 10
CL
x 2
CR
x 2
DL
x 2
DR
x 2

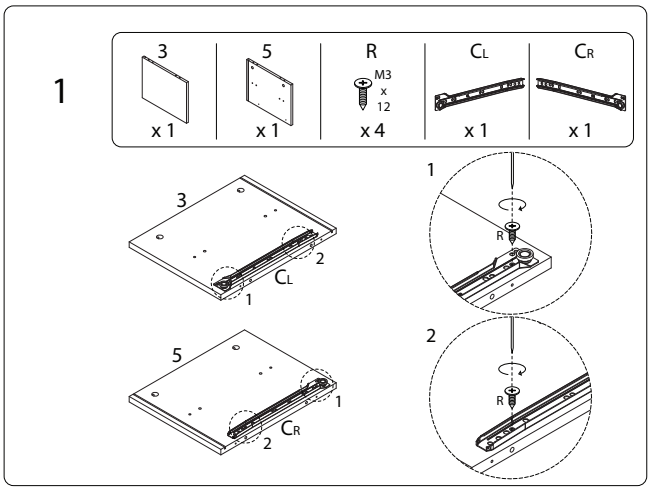
1
3
x 1
5
x 1
R
M3 x 12
x 4
CL
x 1
CR
x 1
3
2
CL
1
5
1
CR
2
1
R
2
R

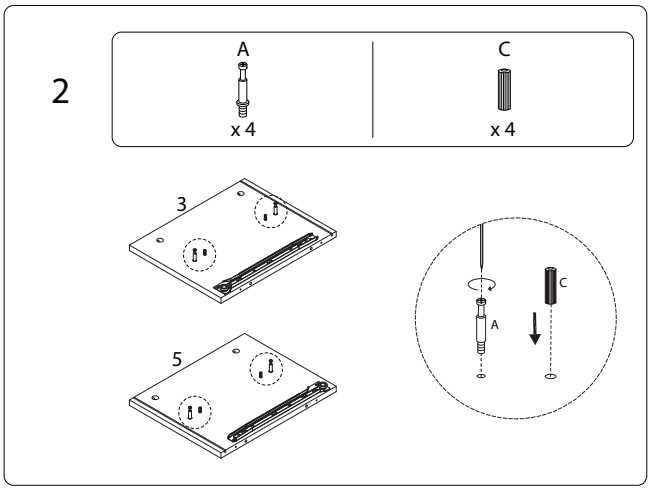
2
A
x 4
C
x 4
3
5
A
C

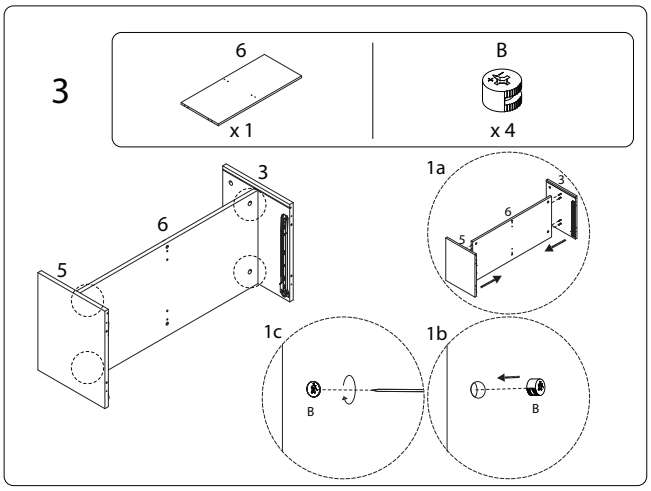
3
6
x 1
B
x 4
3
6
5
1a
3
6
5
1c
B
1b
B

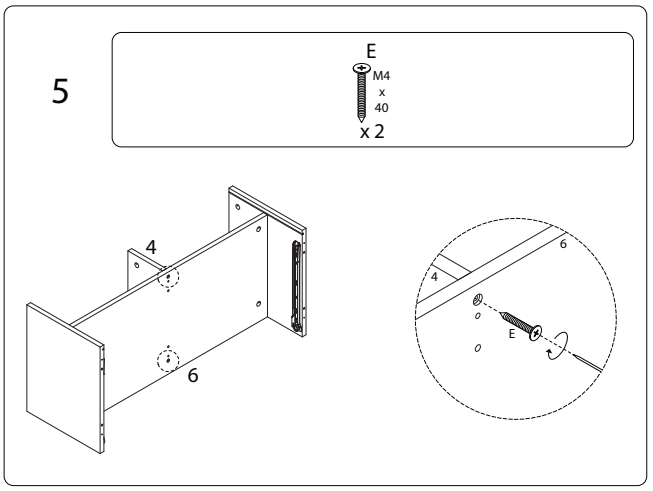
5
E
M4 x 40
x 2
4
6
4
6
E

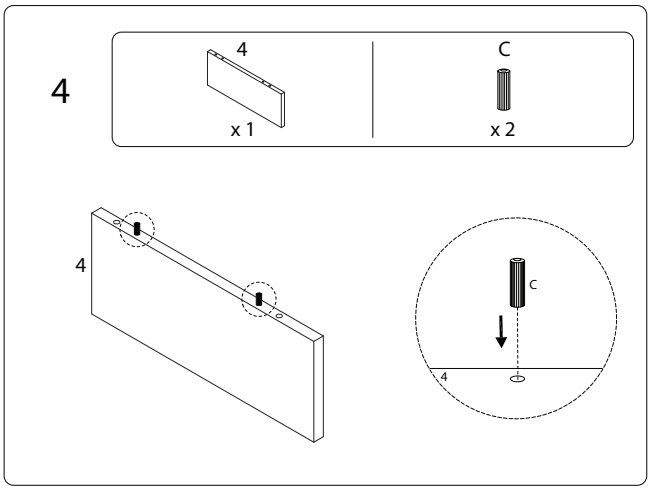
4
4
x 1
C
x 2
4
C
4

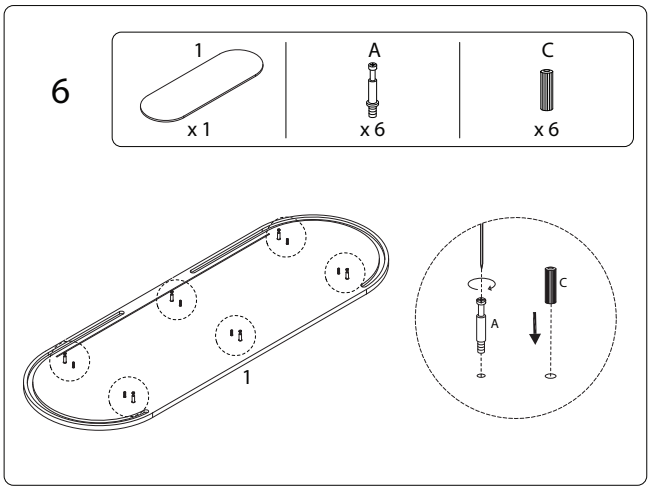
6
1
x 1
A
x 6
C
x 6
1
C
A

7

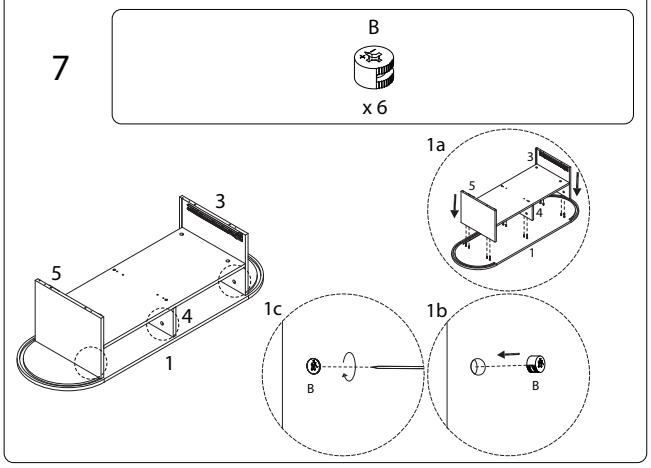

8

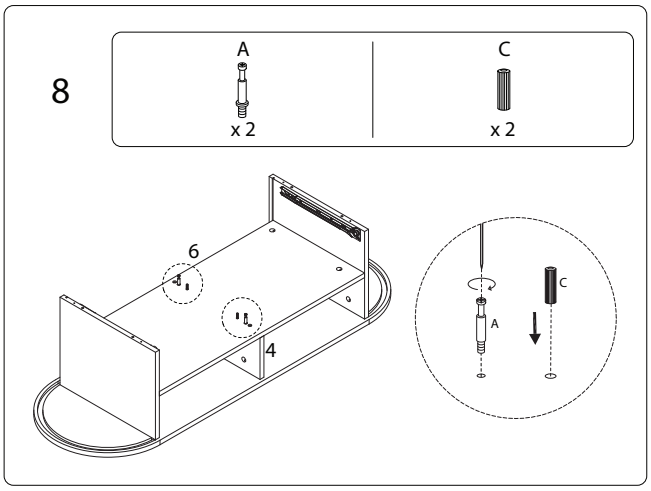

9

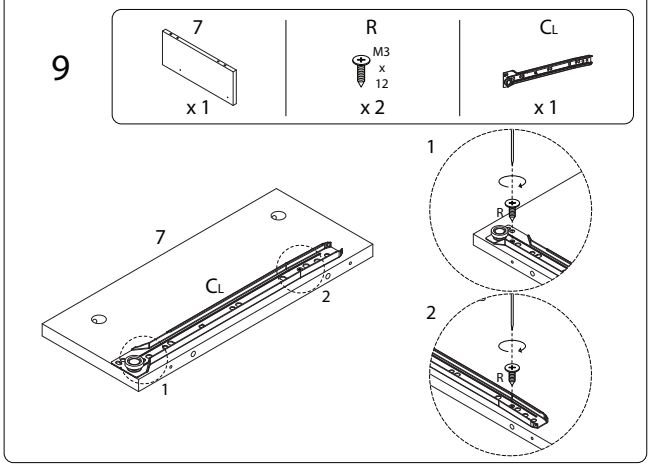

10

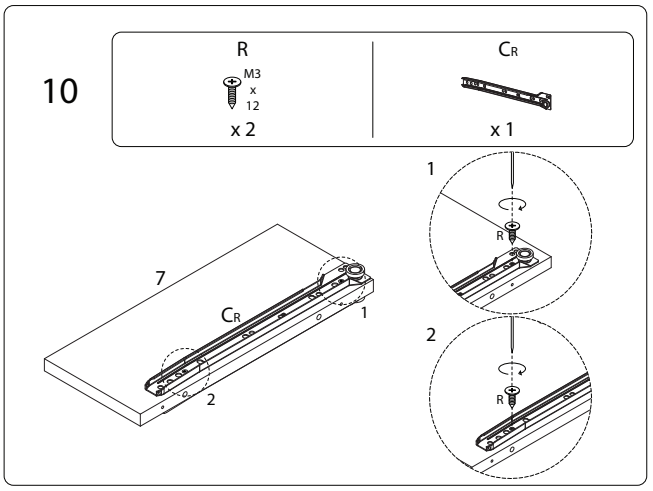

11

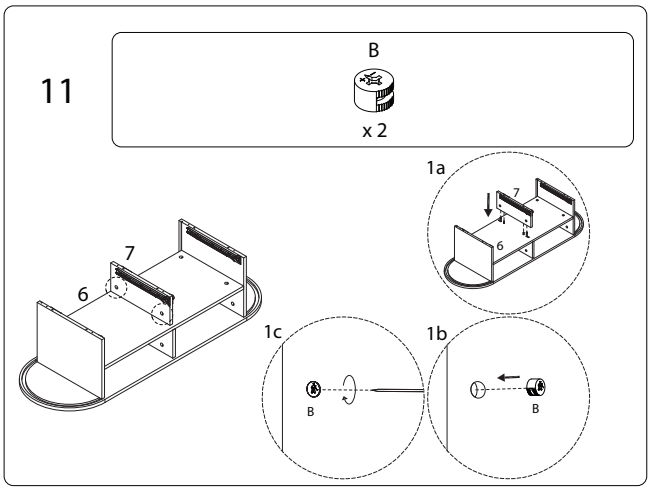

13 x 2

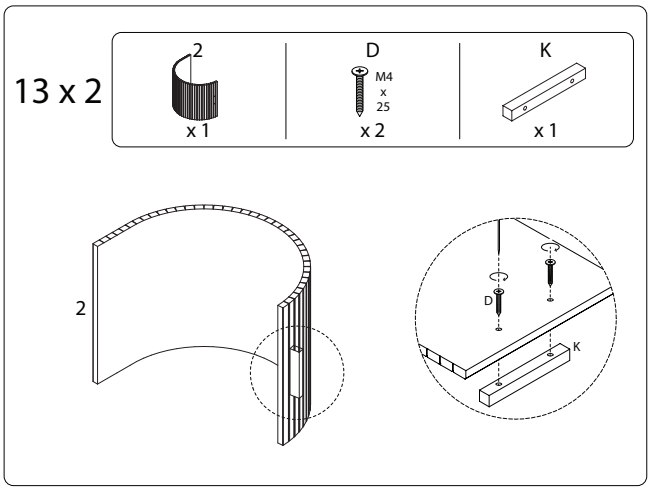

12

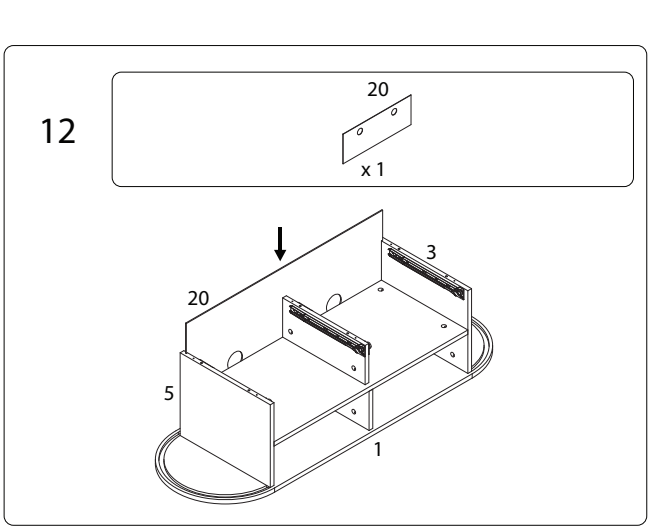

14

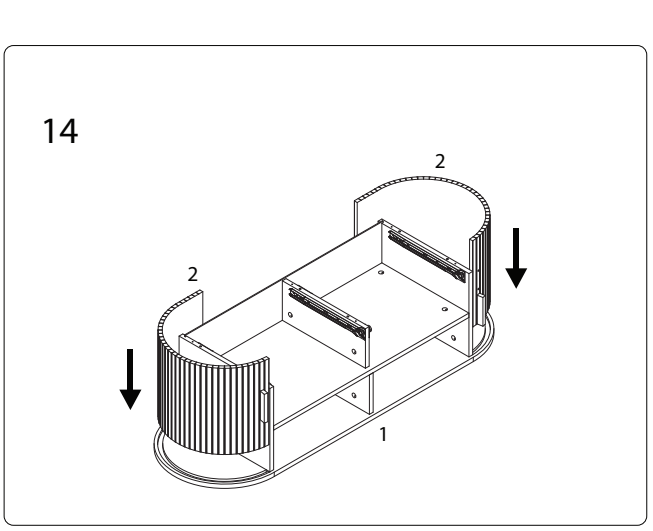

15

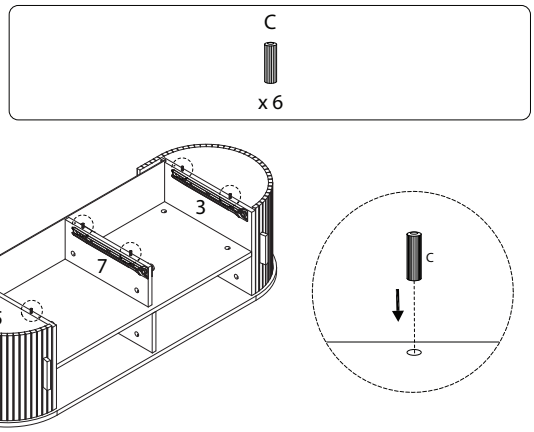

16

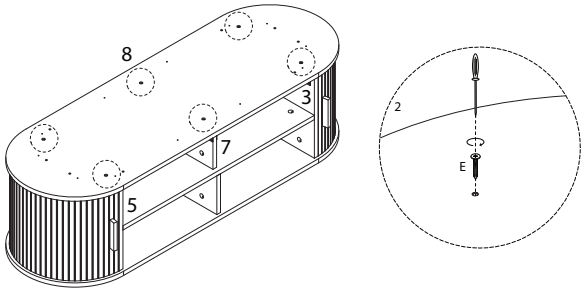

17

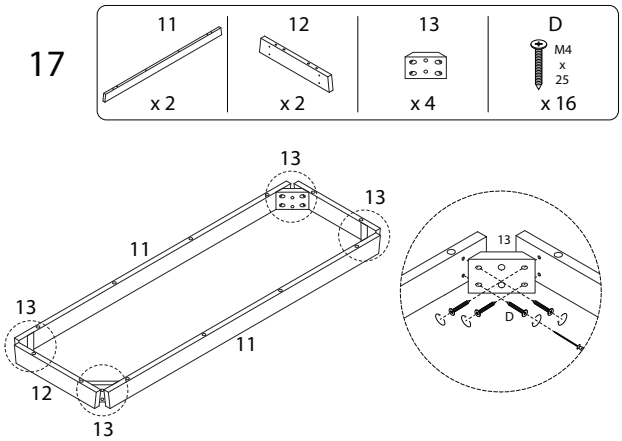

18

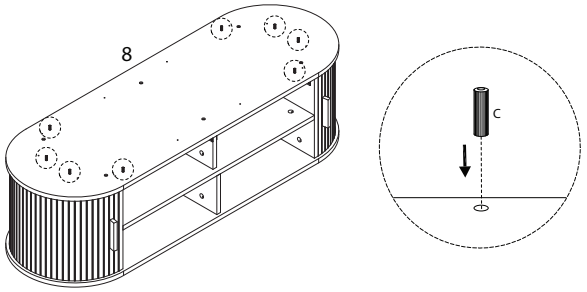

19

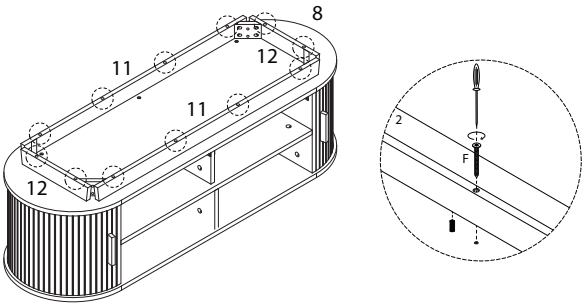

20

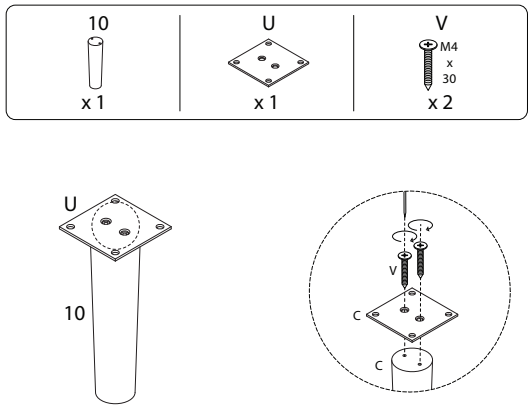

21

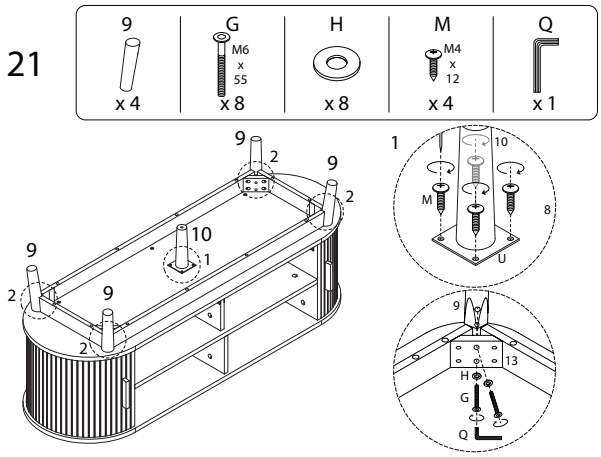

22

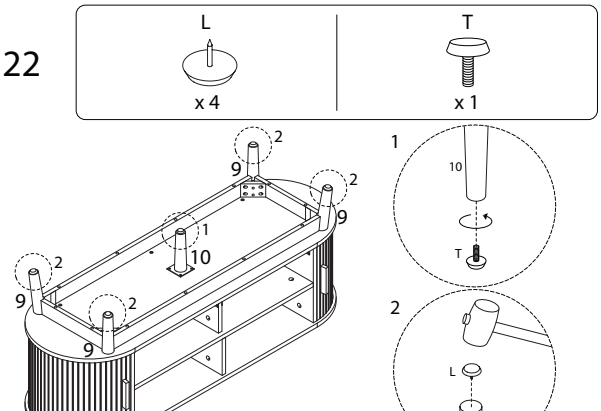

23

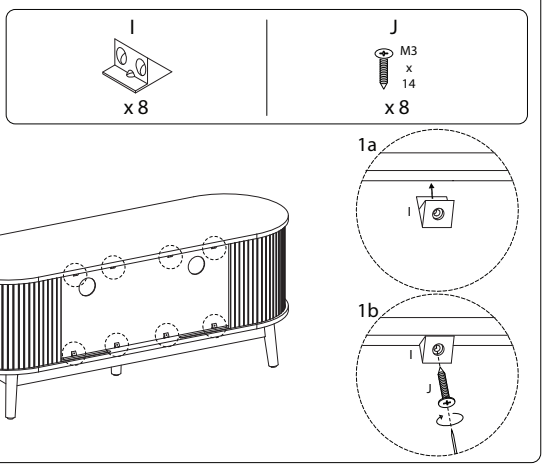

24

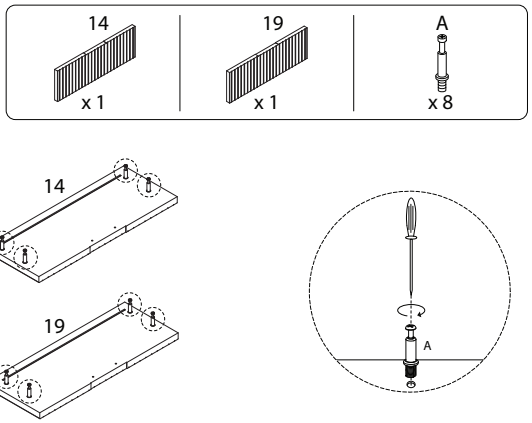

25

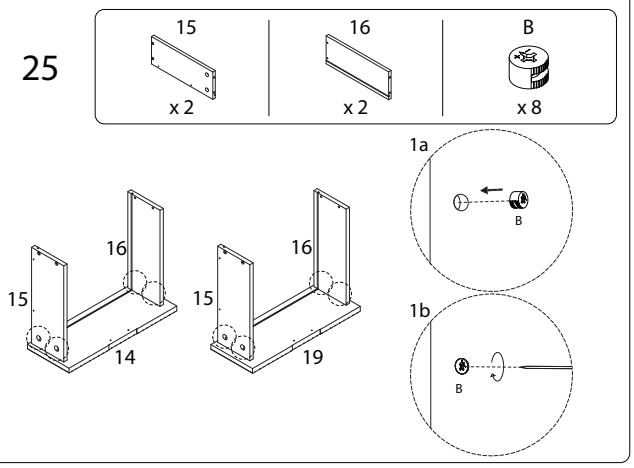

26

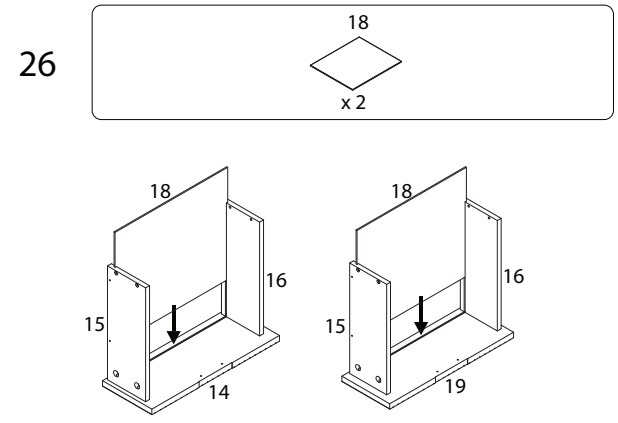

27

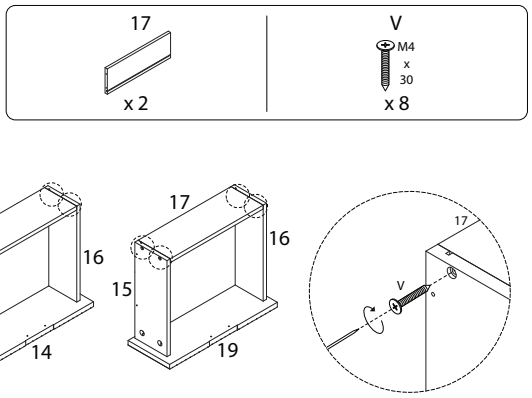

28

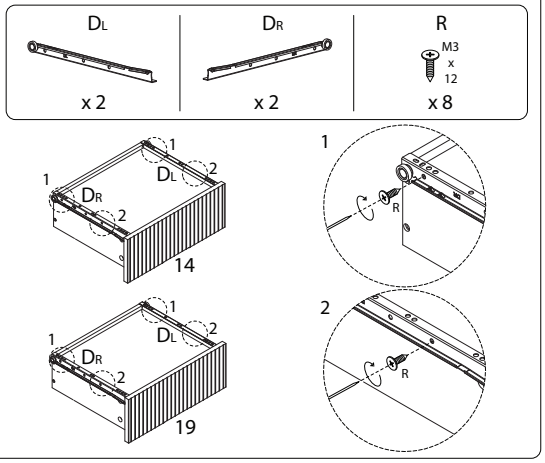

29

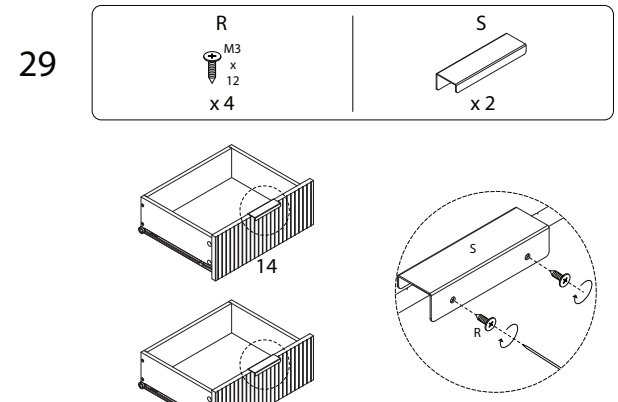
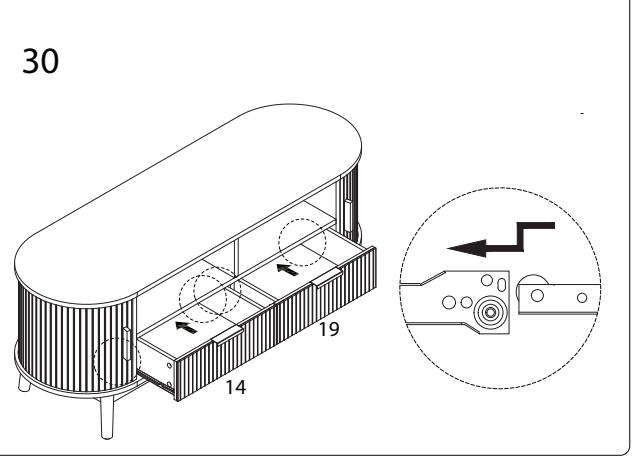
30