EKSJO

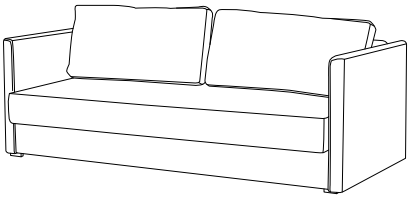

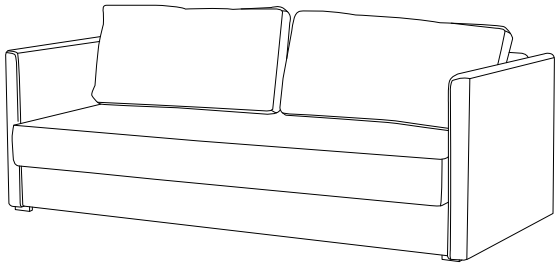

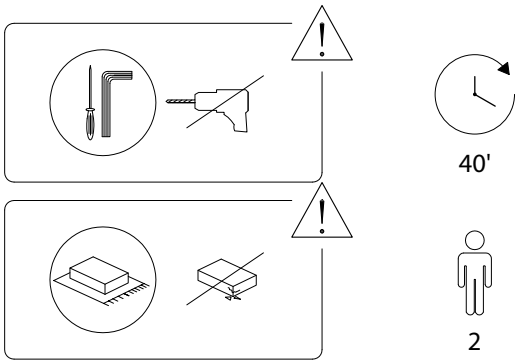

1082/EKSJO/091224/

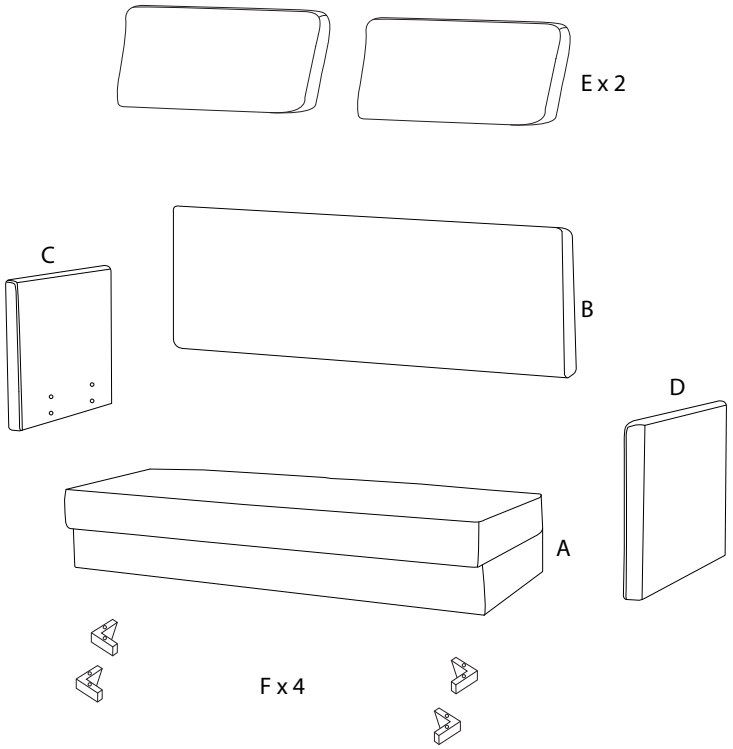

1082/EKSJO/091224/

A 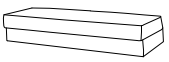 x 1	B  x 1	C 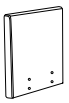 x 1
D 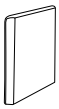 x 1	E  x 2	F  x 4
G  x 2	H  x 10	I  x 10
J 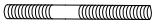 x 8	K  x 1	L  x 8
M  x 1		

1082/EKSJO/091224/

1

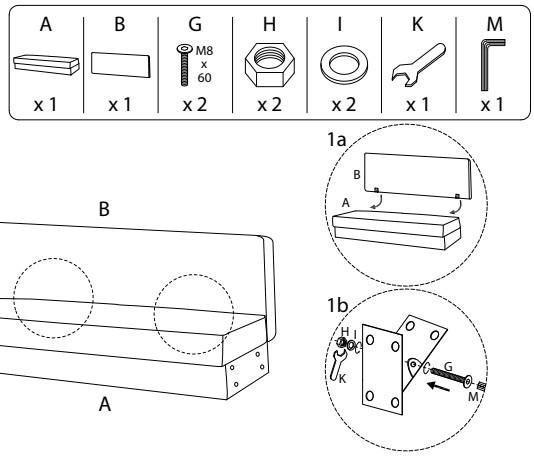
A
x 1
B
x 1
G
M8
x
60
x 2
H
x 2
I
x 2
K
x 1
M
x 1
1a
B
A
B
A
1b
H
I
K
G
M

3

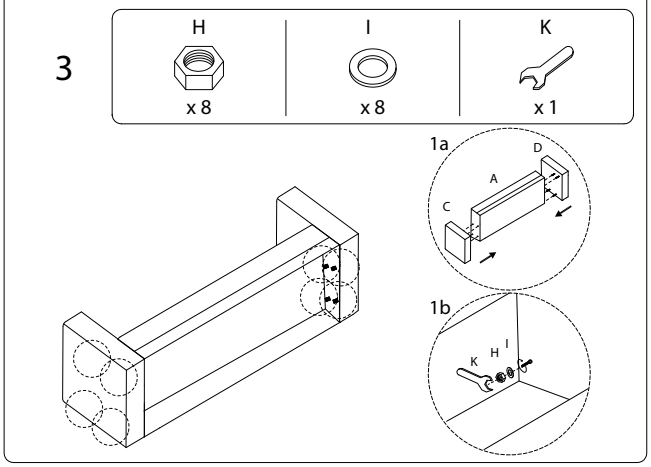
H
x 8
I
x 8
K
x 1
1a
D
A
C
1b
K
H
I

2

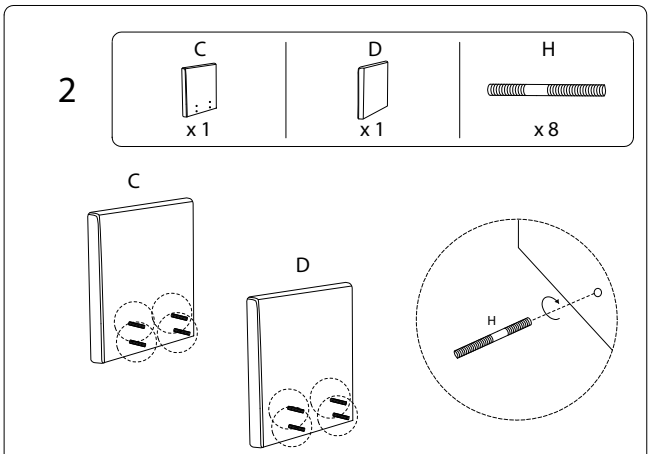
C
x 1
D
x 1
H
x 8
C
D
H

4

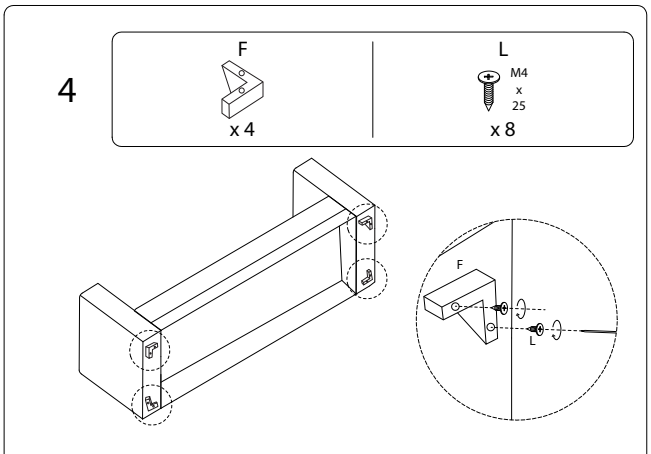
F
x 4
L
M4
x
25
x 8
F
L

5

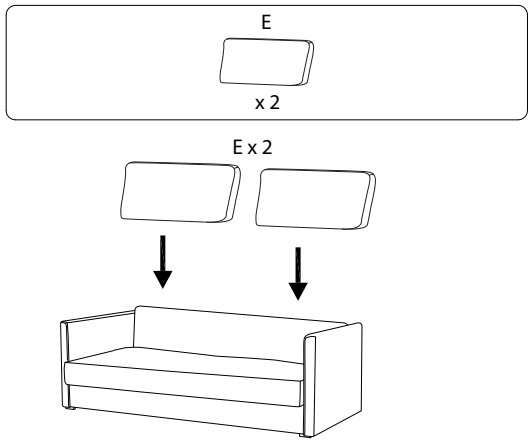
E
x 2
E x 2

!

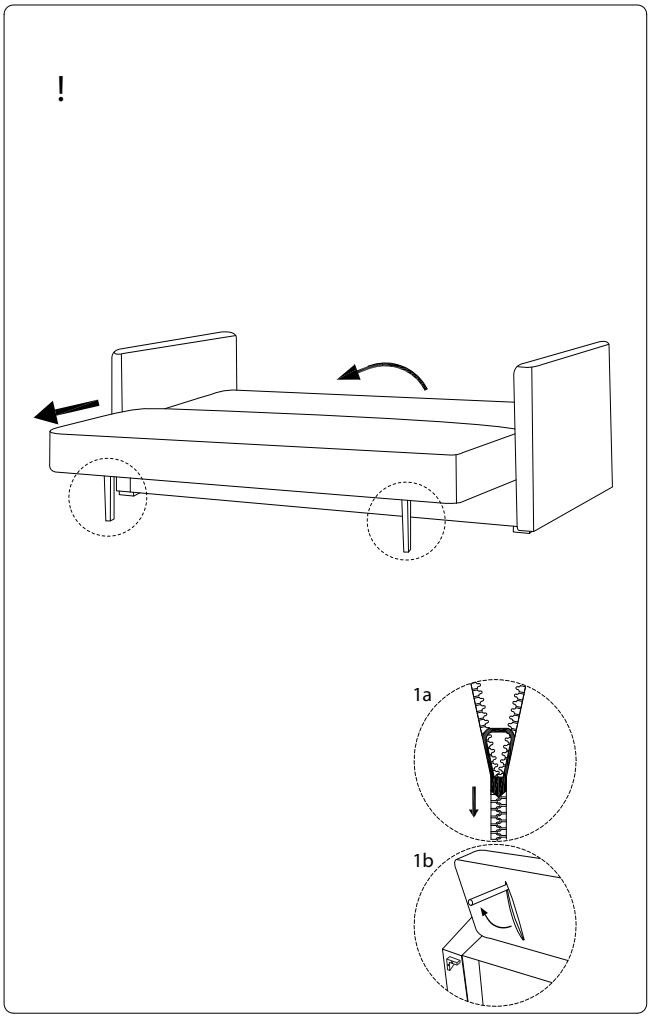
1a
1b