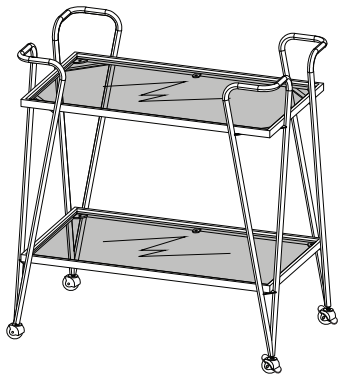

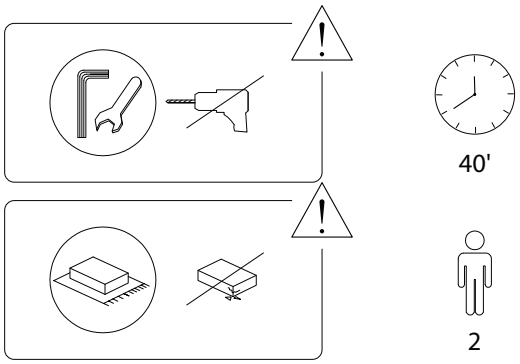

1/6

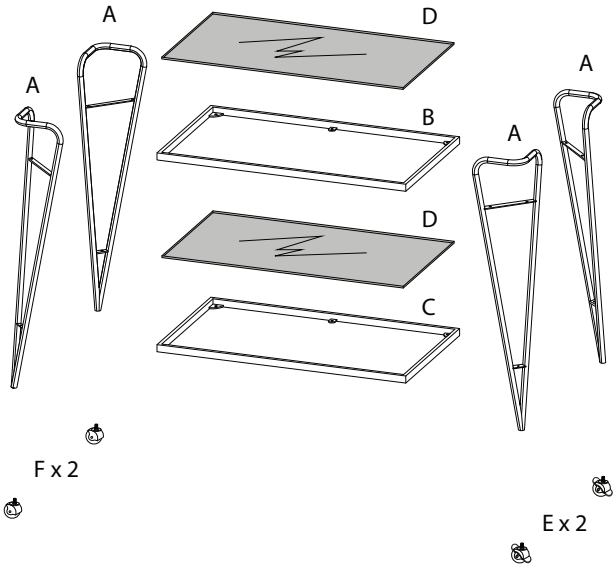

A

x 4

2/6

B	C	D
x 1	x 1	x 2
E	F	G
x 2	x 2	x 1
H	I	J
x 1	x 12	x 12

3/6

1

A	B	H	J
x 4	x 1	x 1	M6 x 12 x 8

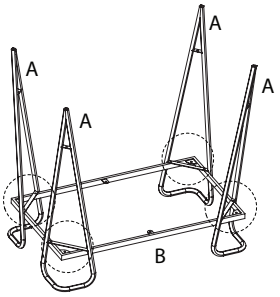

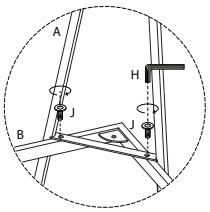

2

C	H	J
x 1	x 1	M6 x 12 x 4

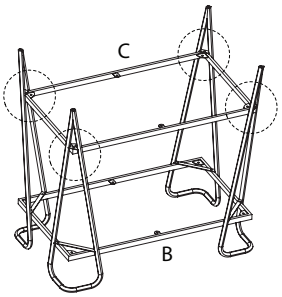

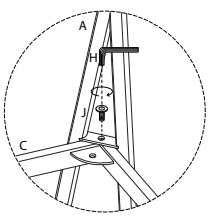

4/6

3

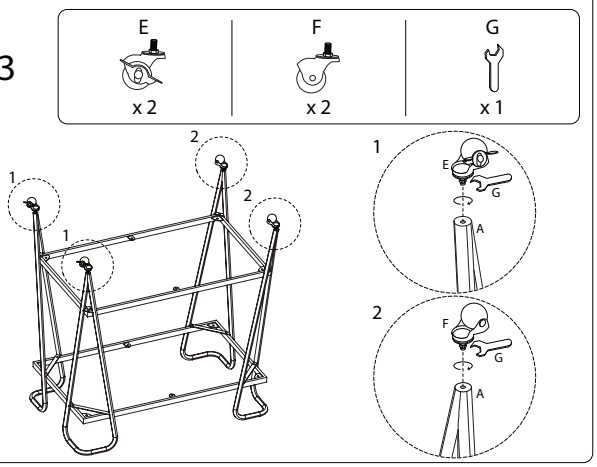

4

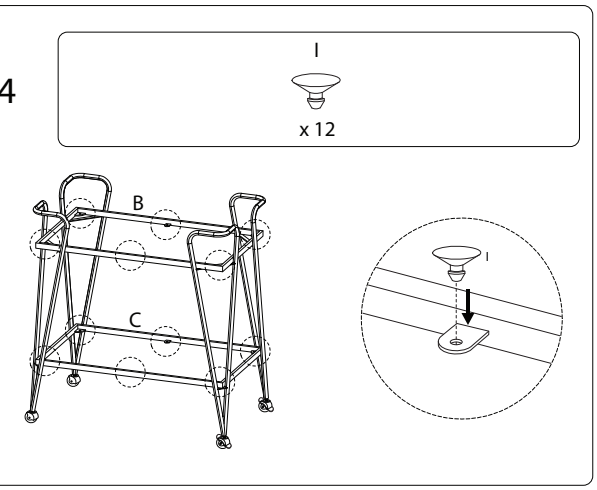

5

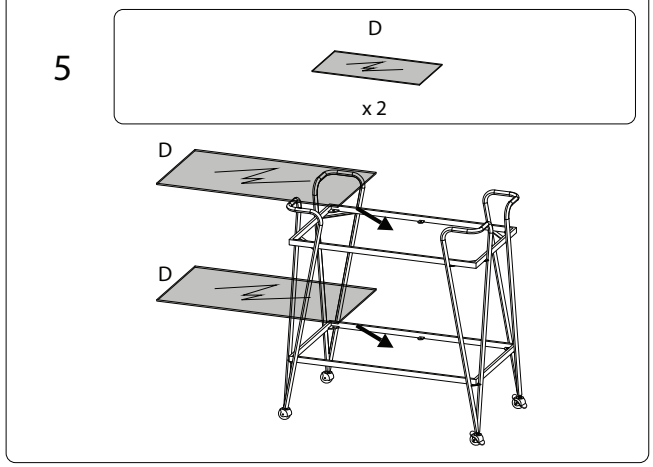

810/NOTI/270422/